Contents

Contents.....1
Specifications.....2
Electrical Adjustment Procedure.....3
Block Diagram.....4
Parts List & Top View of P.C Boards.....5,6
Point to Point Wiring Diagram.....7,8
Packing.....9
Parts List & Exploded View of Deck Mechanism Ass'y.....9,10
Parts List & Exploded View of Cabinet & Chassis..... 11,12
Parts List & Top View of P.C Boards.....13,14,15,16,17,18

Specifications

Type	Logic Controlled Stereo Cassette Deck with Dolby NR type B-C System
Track System	4 Track, 2 Channel Stereo Recording/Playback
Recording System	AC Bias System (Bias Frequency: 85KHz)
Erasing System	AC System
Tape Speed	1-7/8 IPS(4.76cm/sec)
Heads	Sendust REC/PB Head× 1 Double Gap Erasing Head× 1
Motor	Electronic Governor Controlled DC Moter
Wow and Flutter	Less than 0.04%(WRMS)
Fast Winding Time	Approx. 105 Seconds with C-60 Cassette Tape
Frequency Response —20dB Rec	Normal Tape 30-16,500Hz (40-15,000Hz +1, —3dB) CrO_2 Tape 30-17,000Hz (40-16,000Hz +1, —3dB) Metal Tape 30-18,500Hz (40-17,500Hz +1, —3dB)
0dB Rec(Dolby NR off)	Metal Tape 30-12,000Hz ±3dB
0dB Rec(Dolby NR.C on)	Metal Tape 30-13,500Hz ±3dB
Signal to Noise Ratio (Rec/PB)	Dolby NR-B on(Weighted) 64dB(Normal Tape) 65dB(CrO_2 Tape) 65dB(Metal Tape) Dolby NR-C on(Weighted) 73dB(Normal Tape) 74dB(CrO_2 Tape) 74dB(Metal Tape) Dolby NR off(Weight) 54dB(Normal Tape) 55dB(CrO_2 Tape) 55dB(Metal Tape)
Total Harmonic Distortion	Less than 1.1% at 1KHz, 0dB Rec
Input Sensitivity/ Impedance	Line 70mV/47K ohms
Output Level/Impedance	650mV/1.2K Ohms
Power Consumption	24Watts
Size	483(W)× 95(H)× 318(D)mm 19(W)× 3.7(H)× 12.5(D)Inches
Weight	7.1Kg/15.6Lbs.

www.hifiengine.com

Electrical Adjustment Procedure

To make the adjustments the following instruments are recessary:
* High sensitivity AC voltmeter
* Audio frequency oscillator
* Attenuator
* Oscilloscope
* Wow/flutter meter with Frequency counter
* CCIR/ARM noise Weighting filter
* Test tapes(MTT111, MTT114, MTT150, MTT217G)

I. TAPE SPEED

1. Connect the wow and flutter meter to OUTPUT terminals.
   * Output terminals: Line Output.
2. Play back the 3KHz, −10dB signal of the test tape (MTT-111).
3. Insert a small-screwdriver into the adjustment hole (=top of the motor), and adjust the semifixed resistor till the wow and flutter meter reads 3KHz.
   * If the speed is low, turn the resistor clockwise.
   * If the speed is high, turn it counter-clockwise.

II. HEAD AZIMUTH(Fig. 1)

1. Switch the 120μS PB EQ ON.
2. Connect the voltmeter and oscilloscope to OUTPUT terminals.
3. Play back the 10KHz, −10dB signal of the test tape (MTT-114).
4. Observing the voltmeter, turn screw(REC/PB head adjusting screw) to maximize the signal on both the left and right channels.
5. After adjustment, be sure to lock screw so that it cannot move.

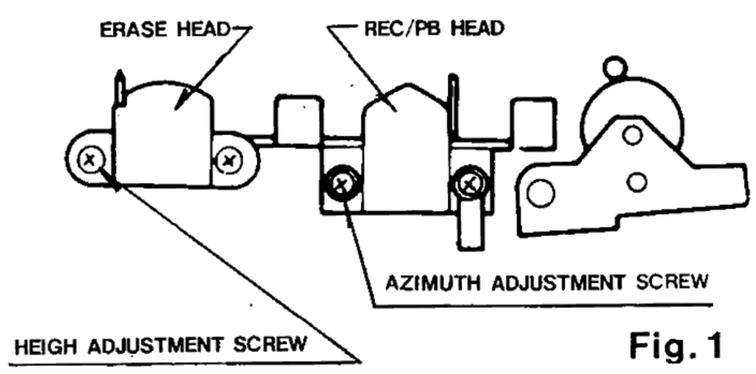

Fig. 1

III. PLAYBACK LEVEL

1. Connect the voltmeter and oscilloscope to the OUTPUT terminals.
2. Switch the DOLBY NR switch OFF.
3. Playback the 400Hz, 3dB 0.660V signal of the test tape(MTT-150).
4. VR101R(right) and VR101L(left) should be adjusted till the voltmeter read is 0.660V.

IV. FM MPX FILTER

1. Connect the voltmeter and osciloscope to the OUTPUT terminals.
2. Apply the 400Hz sighal to the INPUT terminals (=line input) and put the deck in the REC mode with "DOLBY NR-B, C"
3. Control the REC level volumes till the OUTPUT from the OUTPUT terminals is approximate 3dB(=0.660V)
4. Apply the 19KHz signal to the INPUT terminals (=line input) and put the deck in the REC mode.
5. Adjust L202R(right) and L202L(left) on the MPX filter processor(only white color mark core) so as to minimize the signal coming out of the OUTPUT terminals.

V. RECORDING BIAS

1. Set the REC level controls to their minimum positions and put the record mode.
2. Insert the "NORMAL POSITION" tape and switch "REC BIAS" button to be metal position.
3. Connect the voltmeter to test point T. P3R(right) and T. P3L(left) on the PB amplifier.
4. Adjust VR302R(right) and VR302(left) until the voltmeter reads 10.5mV(=1050μA)
5. Check
   * CrO_2 : Adjust VR304 until the voltmeter reads 7.0mV(=700uA).
   * NORMAL : Adjust VR303 until the voltmeter reads 4.0mV(=400uA).

VI. BIAS TRAP

1. Put the deck in the record mode and set the REC level controls to their minimum position.
2. Switch the tape selector to "METAL" Position.
3. Connect the frequency counter to TP. 4R(or 4L)
4. Adjust L301 until the bias frequency 85KHz.
5. Connect the voltmeter and oscilloscope to terminals TP. 4R(right) and TP. 4L(left) on the REC amplifier
6. Adjust L203R(right) and L203L(left) until the outp' of the bias wave form is minimized.

VII. RECORDING LEVEL

1. Apply a 400Hz signal to the INPUT terminals(=lin. input) and put the deck in the REC mode.
2. Connect the voltmeter and oscilloscope to the T.P1R or T. P1L
3. Adjust the REC level controls until the OUTPUT from the T. P 1R/L is 0.385V.
4. Connect the voltmeter to test point TP. 2R(right) and TP. 2L(left) on the REC amplifier.
5. Set the TAPE selector to "NORM."
6. Adjust VR301R(right) and VR301L(left) until the voltmeter reads about −4~−6dB.

www.hifiengine.com

Block Diagram

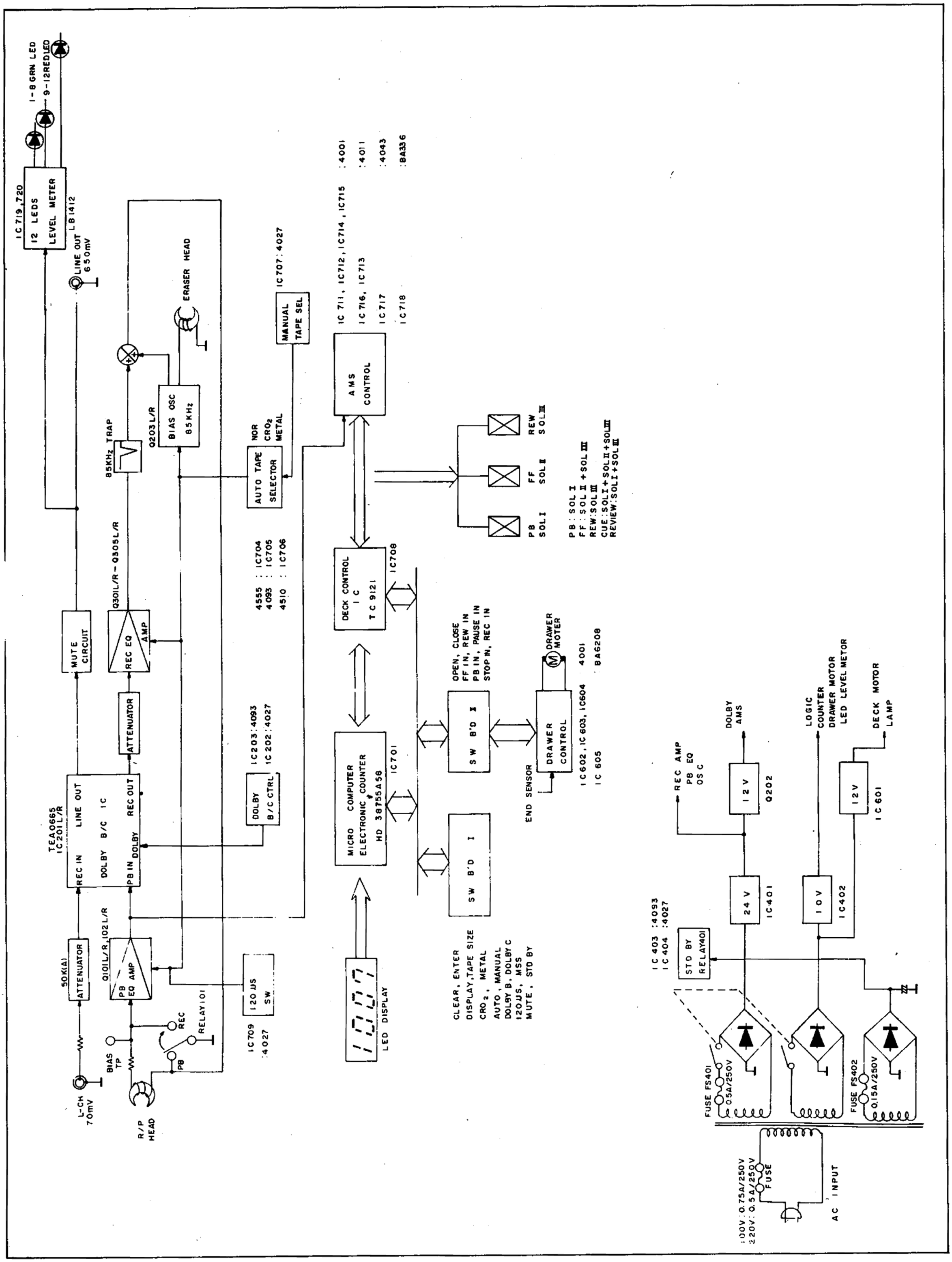

www.hifiengine.com

Parts List & Top View of P.C Boards

FRONT BOARD 4003311600

Ref No.	Parts No.	Description	Position
● TRANSISTOR			
Q501	2208606104	TR NPN KTC 1815Y	
Q502	〃	〃	
Q503	〃	〃	
Q504	〃	〃	
Q505	〃	〃	
Q506	〃	〃	
Q507	〃	〃	
● RESISTOR			
R502	3069122270	Resistor C.F 1.2K ohm ¼WJ	
R504	〃	〃	
R506	〃	〃	
R510	〃	〃	
R511	〃	〃	
R512	〃	〃	
R501	3069473270	Resistor C.F 47K ohm ¼WJ	
R503	〃	〃	
R507	〃	〃	
R508	〃	〃	
R509	〃	〃	
R505	3069681270	Resistor C.F 680 ohm ¼WJ	

DRAWER BOARD 4003311500

Ref No.	Parts No.	Description	Position
● TRANSISTOR			
Q609	2208206105	TR PNP KTA 1015Y	B
Q610	〃	〃	
Q611	〃	〃	
Q605	2208606104	TR NPN KTC 1815Y	A
Q606	〃	〃	
Q607	〃	〃	
Q608	〃	〃	
Q601	2008609101	TR NPN MPS A05	A
Q602	〃	〃	
Q603	〃	〃	
Q604	2028406113	TR NPN KTD 880Y	A
● DIODE			
D601	2058106100	Diode Rectifier IN4002	A
D602	〃	〃	
D603	〃	〃	
D604	2058306101	Diode 1 N4148	A
D605	〃	〃	
D606	〃	〃	
D607	〃	〃	
D608	〃	〃	

Ref No.	Parts No.	Description	Position
● DIODE			
D609	2058306101	Diode 1N4148	
D610	〃	〃	
D611	〃	〃	
D612	〃	〃	
D613	〃	〃	
D614	〃	〃	
D615	〃	〃	
D617	〃	〃	
D616	〃	〃	
D618	〃	〃	
● IC			
IC602	2138011102	IC HD1400IB	A
IC603	〃	〃	
IC604	〃	〃	
IC605	2168022107	IC BA6208	B
IC601	2168600102	IC L7812CV	A
● RESISTOR			
R602	3069102270	Resistor C. F 1K ohm ¼WJ	
R603	〃	〃	
R604	〃	〃	
R606	〃	〃	

Ref No.	Parts No.	Description	Position
R619	3069102270	Resistor C.F 1K ohm¼WJ	
R622	〃	〃	
R623	〃	〃	
R607	3069102270	Resistor C. F 10K ohm ¼WJ	
R618	〃	〃	
R620	〃	〃	
R611	3069104270	Resistor C. F 100K ohm ¼WJ	
R621	〃	〃	
R605	3069223270	Resistor C.F 22K ohm ¼WJ	
R613	3069273270	Resistor C.F 27K ohm ¼WJ	
R614	3069472270	Resistor C.F 4.7K ohm ¼WJ	
R615	〃	〃	
R616	3069473270	Resistor C.F 47K ohm ¼WJ	
R617	〃	〃	
R624	〃	〃	
R625	〃	〃	
R626	〃	〃	
R612	3069471270	Resistor C.F 470 ohm ¼WJ	
R610	3069474270	Resistor C.F 470K nhm ¼WJ	
R608	3069222270	Resistor C.F 2.2K ohm ¼WJ	
R609	3069332270	Resistor C.F 3.3K ohm ¼WJ	
R601	3069561270	Resistor C.F 560 ohm ¼WJ	
● CAPACITOR			
C609	3479210971	Cap Elect AF SA 1uF 50V	
C605	3479222031	Cap Elect AF SA 220F 16V	
C606	〃	〃	
C607	〃	〃	
C601	3479222971	Cap Elect AF SA2.2uF 50V	
C604	〃	〃	
C608	3579104530	Cap Ceramic 0.1uF 50VZ	
C602	3679472120	Cap Mylar 0.047uF 100VJ	
C603	〃	〃	

SENSOR BOARD 4003311510

Ref No.	Parts No.	Description	Position
	2408010100	Photo Inturruptor	

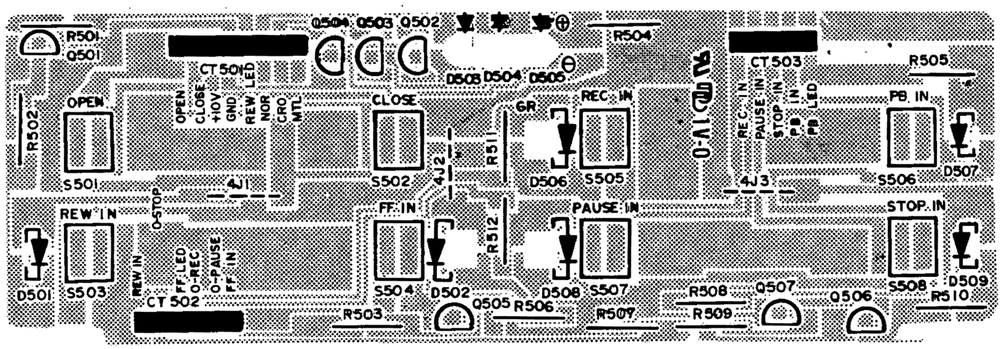

FRONT BOARD 4003311600

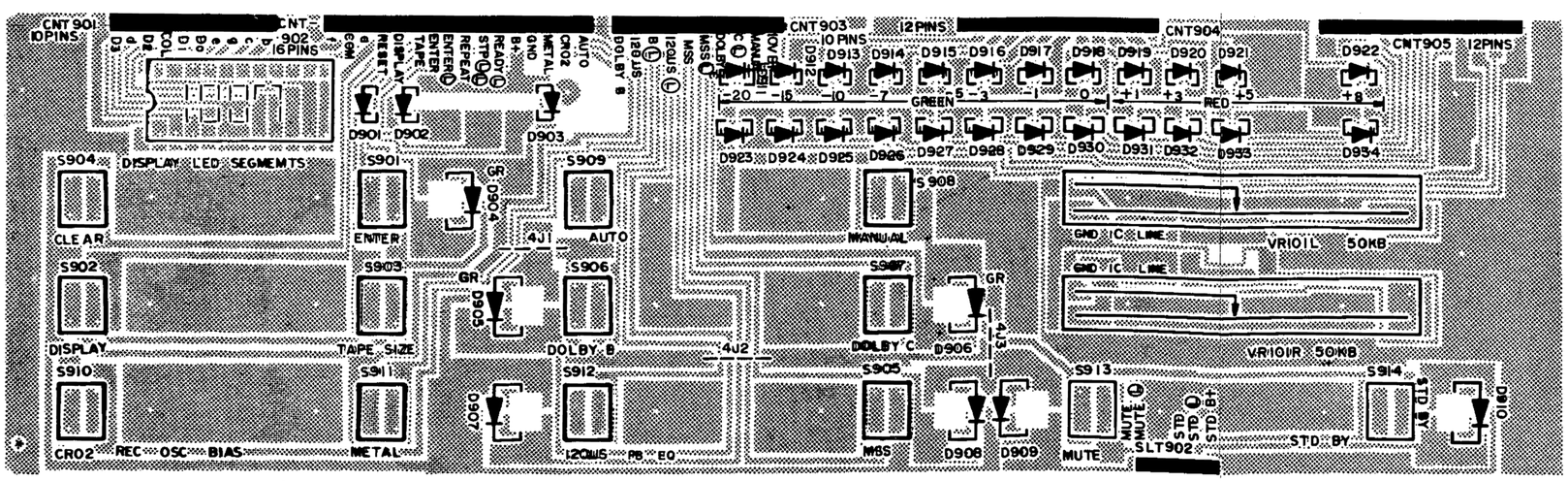

DISPLAY BOARD 400331 1400

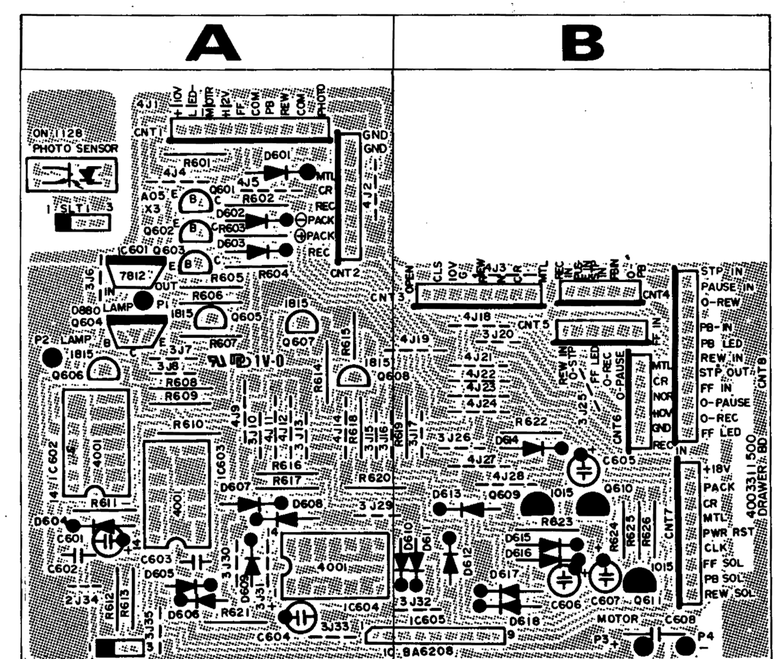

SENSOR BOARD 4003311510

Point to Point Wiring Diagram

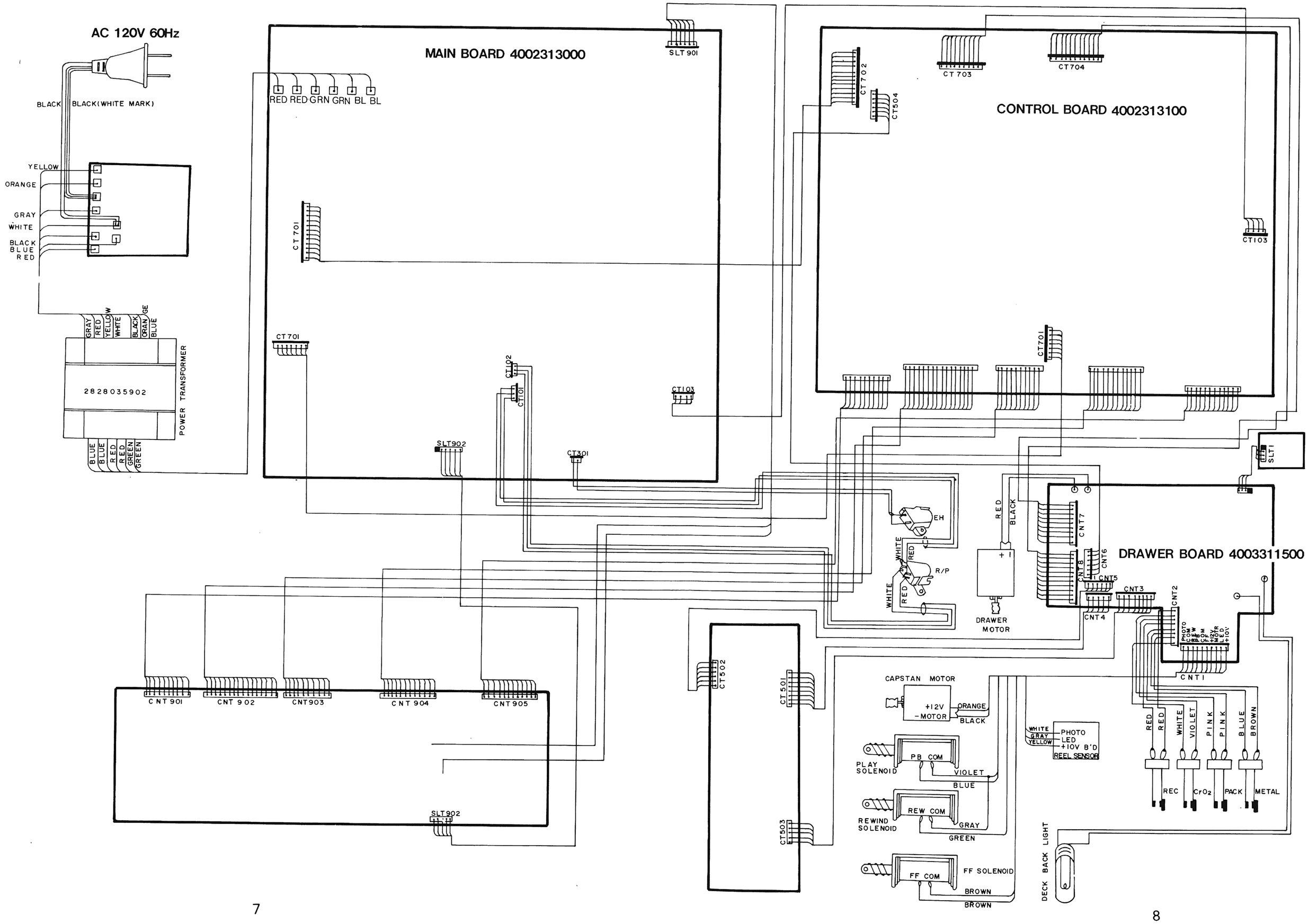

www.hifiengine.com

Parts List & Exploded View of Deck Mechanism Ass'y

NO.	PART NO.	DESCRIPTION	POSITION
1	01144	SCREW 2.6×3	
2	01146	SCREW 2.6×5	
3	01147	SCREW 2.6×6	
4	01165	SCREW 3.0×4	
5	08085	SCREW BIND HEAD 2×4	
6	08086	SCREW BIND HEAD 2×5	
7	17165	TAP TIGHT SCREW 3.0×4	
8	17166	TAP TIGHT SCREW 3.0×5	
9	18086	SCREW 2.0×5 SW	
10	19146	SCREW 2.6×5 SW	
11	19151	SCREW 2.6×10SW	
12	19166	SCREW 3.0×5 SW	
13	23002	SCREW(FINE TYPE)2.0×5	
14	23035	SCREW 2.6×3	
15	30126	FLAT WASHER 2.8×7.5×0.5	
16	30907	FW 3.0×6.0×0.5	
17	30909	FW 3.1×5.0×0.2	
18	30911	FW 2.3×9.0×0.5	
19	32201	P.S.W. 2.1×4.0×0.13	
20	32405	P.S.W 4.1×6.5×0.5	
21	32602	P.S.W. 6.2×9.5×0.25	
22	36015	E RING E-1.5	
23	36025	E RING E-2.5	
24	36030	E RING E-3.0	
25	36450	G RING G-5.0	
26	36625	C RING C-2.5	
27	42020	STEEL BALL M2.0	
28	43004	HEAD WASHER 0.1T	
29	A1240	REEL ASS'Y 9TS-BR15	
30	A1250	RF ASS'Y 9TS-130	
31	A1280	CLUTCH ASS'Y 95A-55	
32	A1390	REEL ASS'Y 9TS-BR15AL	
33	E0620	CONNECTOR ASS'Y 5250-08-01	
34	E2730	WIRE CLAMPER 5167-C	
35	E2760	WIRE(GY)40×5×5 #26	
36	E2790	WIRE ASS'Y BK-40 #24	
36	E2820	PHOTO SENSOR ON2160-Q	
38	E2850	PHOTO SENSOR PCB H-1	
39	E3030	WIRE(BW)45×4×4 #28	
40	E4520	PIN BLOCK 3022-08A	
41	E4530	PIN BLOCK 3022-10A	
42	E9110	CONNECTOR ASS'Y 5250-10-01	
43	F0350	FLYWHEEL 9C	
44	H0850	ERASE HEAD H53211-02	
45	H1310	RP HEAD H3331-0294 0	
46	J1760	PINCH ROLLER R	
47	K4750	CALKING SOLENOID BKT 9TSA	
48	K4760	CALKING SLIDE BKT 9TSA	
49	K4770	CALKING PULLEY BKT 9TSA	
50	K4940	CALKING PLAY ARM 9TAA	
51	K4950	CALKING CHASSIS 9CA	
52	K5550	CALKING HEAD PANEL 9TSB	
53	M0430	MOTOR XM16B2ML	
54	P0750	SOLENOID TDS-06UB00075-17U140	
55	P0760	SOLENOID TDS-06UB-00076-17U85	
56	Q0240	RP HEAD SP B	
57	Q0870	REW REEL SP B	
58	Q4750	CAM LEVER SP 9A	
59	Q4780	BRAKE RELEASE SP BOARD 9A	
60	Q5080	RF LEVER SP 9B	
61	Q5500	PINCH ROLLER SP 9TS	
62	Q5510	HEAD PANEL SP 9TS	
63	Q5530	CLUTCH ARM SP 9TS	
64	Q5540	SENSOR SW SP	
65	Q5550	SENSOR SW COVER SP 9TS	
66	Q5670	BRAKE ARM SP 9D	
67	Q5680	SOLENOID SP 9E	
68	Q5700	SOLENOID SP 9F	
69	Q6360	RF OPERATING LEVER SP 9B	
70	Q6640	PLAY ARM SP 9TS	
71	Q0960	LEAF SW LSA-2119-2	
72	U0610	REEL CAF A P	
73	U1450	RUBBER CUSHION E	
74	U3290	RF LEVER 9A	
75	U3300	BRAKE ARM 9A	
76	U3310	BRAKE RELEASE BOARD 9A	
77	U3320	DRIVE GEAR 9A	
78	U3330	RF DRIVE GEAR 9A	
79	U3340	TRIGGER LEVER 9A	
80	U3350	RF TRIGGER LEVER 9A	
81	U3400	CAPSTAN GEAR 9A	

NO.	PART NO.	DESCRIPTION	POSITION
82	U3890	CAM LEVER 9A-GC25	
83	U3900	BELT 1.4×60-60	
84	U3920	BELT 92×3.5×9.4-60	
85	U3940	CASSETTE GUIDE 9TS	
86	U3960	FLYWHEEL SUPPORT 9B	
87	U4030	SENSOR SW COVER 9TS	
88	V2910	COLLAR 2.8×3.8×2	
99	V4530	PINCH ROLLER SHAFT D	
90	V5920	INTERMEDIATE PULLEY SHAFT 2×13.7	
91	V9220	MOTOR PULLEY 9TS2×9V11.5RE	
92	V9240	SHAFT 2.5×47.5	
93	W1100	INTERMEDIATE PULLEY 9TSB	
94	X4110	OIL STOP WASHER	
95	X9250	PANEL SUPPORTER 3A	
96	Y4540	QUICK RETURN SP 9TS	
97	Y4580	FLYWHEEL RETAINER 9TS	
98	Y4590	MOTOR HOLDER 9TS	
100	Y4500	MOTOR BRACKET 9TS	
101	Y4650	SENSOR SW BRACKET 9TS	
102	Y4660	SENSOR SW HOLDER 9TS	
103	Y4700	RF OPERATING LEVER 9B	
104	Y4860	RF SHIFT LEVER 9C	
105	Y5230	PHOTE SENSOR PCB HOLDER	
106	Y5280	CASSETTE RETAIN SP 9TA	
107	Y6170	PINCH ROLLER ARM 9TS	
108	Y6430	PANEL RETAINER 9E	

Packing

NO.	PARTS NO.	DESCRIPTION	Q'TY
1	9705000610	VINYLE BAG	1
2	9007010640	OPERATING INSTRUCTION	1
3	059705000074	VINYLE BAG(SCREW)	1
4	8683000510	WOODEN END CAP	2
5	4328200410	PATCH CORD	2
6	9721000210	POLY CUSHION	2
7	049605047005	CARTON BOX	1

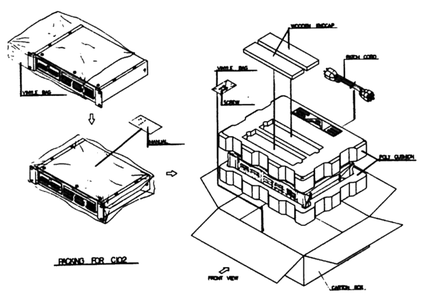

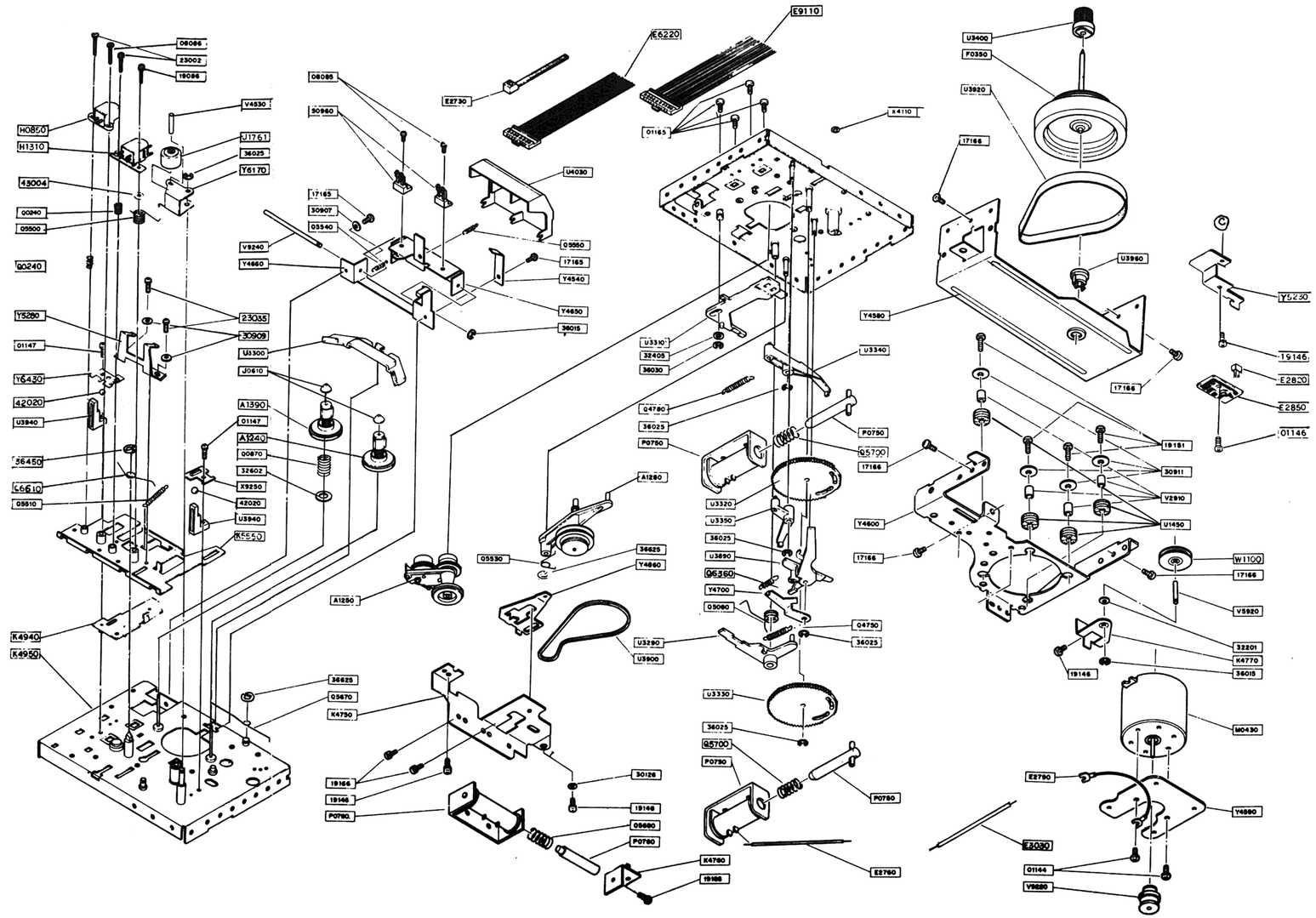

www.hifiengine.com

Parts List & Exploded View of Cabinet & Chassis

No.	Parts No.	Description	Position
1	046122008911	Cover Top	D1
2	8119130083	Screw #1 PT 3× 8B	D1
3	4658001810	SW Tact	D1
4	8523005410	Base BTN	D1
5	8543002820	BTN See-Saw	C1
6	8543002810	BTN See-Saw	C1
7	048603000111	Panel Deck	C1
8	8129330063	Screw #3 FTC 3× 6B	C1
9	048602012611	Panel Front	C1
10	048663000111	Base Rack Mount	C1
11	8585004010	Cap Handle Hole	B1
12	8545014110	Knob Slide V. R	A2
13	8585004010	Cap Handlel Hole	A2
14	8109535081	Screw #3 BT 3.5× 8Y	B3
15	6503005910	BKT Panel	A3
16	8069140081	Screw WPM 4× 8Y	A3
17	8555006330	Window Display	A3
18	8523005710	Cover Display	A3
19	8525006110	Cover Slide V. R	A3
21	4658001811	S/W Tact	A3
22	3238010210	SLVR 45L 50KA× 1	A3
24	8159230081	Screw #2 WPTC 3× 8Y	A3
25	8119130073 8	Screw #1 PT 3× 8B	A3
26	8159535203	Screw #3 WPT 3.5×	A4
27	046123001814	Cover Side "R"	A4
28	6035100710	Foot	A5
29	8159340103	Screw #3 WPTC 4× 10B	A5
30	8109535083	Screw #3 BT 3.5× 8B	A5
31	046122408311	Cover BTM "1"	A5
33	8109535083	Screw #3 BT 3.5× 8B	C5
34	5123615110	Frame Right	C5
35	4438101910	R.C.A Jack(4P)	C5
36	8159230061	Screw #2 WPTC 3× 6Y	D5
37	8109535083	Screw #3 BT 3.5× 8B	D6
38	8119130083	Screw #1 PT 3× 8B	D6
39	4308001410	Cord AC	E5
40	6513001610	Stopper Cord	E5
42	8069140083	Screw WPM 4× 8B	E5
43	8109535061	Serew #3 BT 3.5× 6Y	E5
44	046102015111	Chassis Back	E5
48	8159240061	Screw #2 WPTC 3× 6Y	E4
49	6505058610	BKT Trans	E4
52	6122610310	Frame Deck "R"	D4
53	7185000110	Guide Roller	D4
54	8109330061	Screw #3 BTC 3× 6Y	D4
55	8109330063	Screw #3 BTC 3× 6B	D4
56	8159230061	Screw #2 WPTC 3× 6Y	D4
57	8119330081	Screw #2 PTC 3× 8Y	D4
60	7505201920	REC TR H/Sink G	B4
61	8238000110	Rivet Nylon	C4
62	6503005710	BKT PC BOARD(B)	C4
65	7115001910	Roller "2"	C3
66	8339030011	Washer E-Ring	C3
67	7005004010	Shaft Roller	C3
68	6122610110	Frame Guide "R"	C3
69	6123404210	Cover BTM "2"	C2
70	8109535081	Screw #3 BT 3.5× 8Y	C2
71	6122210210	Chassis Front	C2
72	8109330063	Screw #3 BTC 3× 6B	C2
74	6122610410	Frame Deck "L"	D2
75	7185000110	Guide Roller	D2
76	8109330063	Screw #3 BTC 3× 6B	D2
78	8109330063	Screw #3 BTC 3× 6B	D2
79	8129330063	Screw #3 FTC 3× 6B	D2
80	7185000110	Guide Roller	C2
81	6122610210	Frame Guide "L"	D2
82	046123001813	Cover Side "L"	D2
83	8159535203	Bcrew #3 WPT 3.5× 20B	E2
84	8109535083	Screw #3 BT 3.5× 8B	E2
86	8109535083	Screw #3 BT 3.5× 8B	F3
87	048582000311	Deck Cover	E4
88	8109330063	Screw #3 BTC 3× 6B	E4
89	8109330061	Screw #3 BTC 3× 6Y	D4
90	5708004010	Ass'y Drawer Mecha	D4
93	2528400350	Lamp	E3
94	8555006710	Indicator Tape	E3
95	6505058510	BKT ADJ	E3
96	8329040011	Washer THD/DI ϕ4Y IN	E3
97	8319140011	Washer Spring ϕ4Y	E3
98	8109535081	Screw #3 B.T 3.5× 8Y	E3

No.	Parts No.	Description	Position
99	7115000110	Roller	E3
100	8339030011	Washer E-Ring ϕ3Y	E3
101	7005003710	Shaft Roller	E3
102	8159230061	Screw #2 WPTC 3× 6Y	E3
104	8109330061	Screw #3 BTC 3×	D3
105	6715006610	Guide Rubber	D3
106	6505056610	BKT Stopper	D3
107	8109330061	Screw #3 BTC 3× 6Y	D3

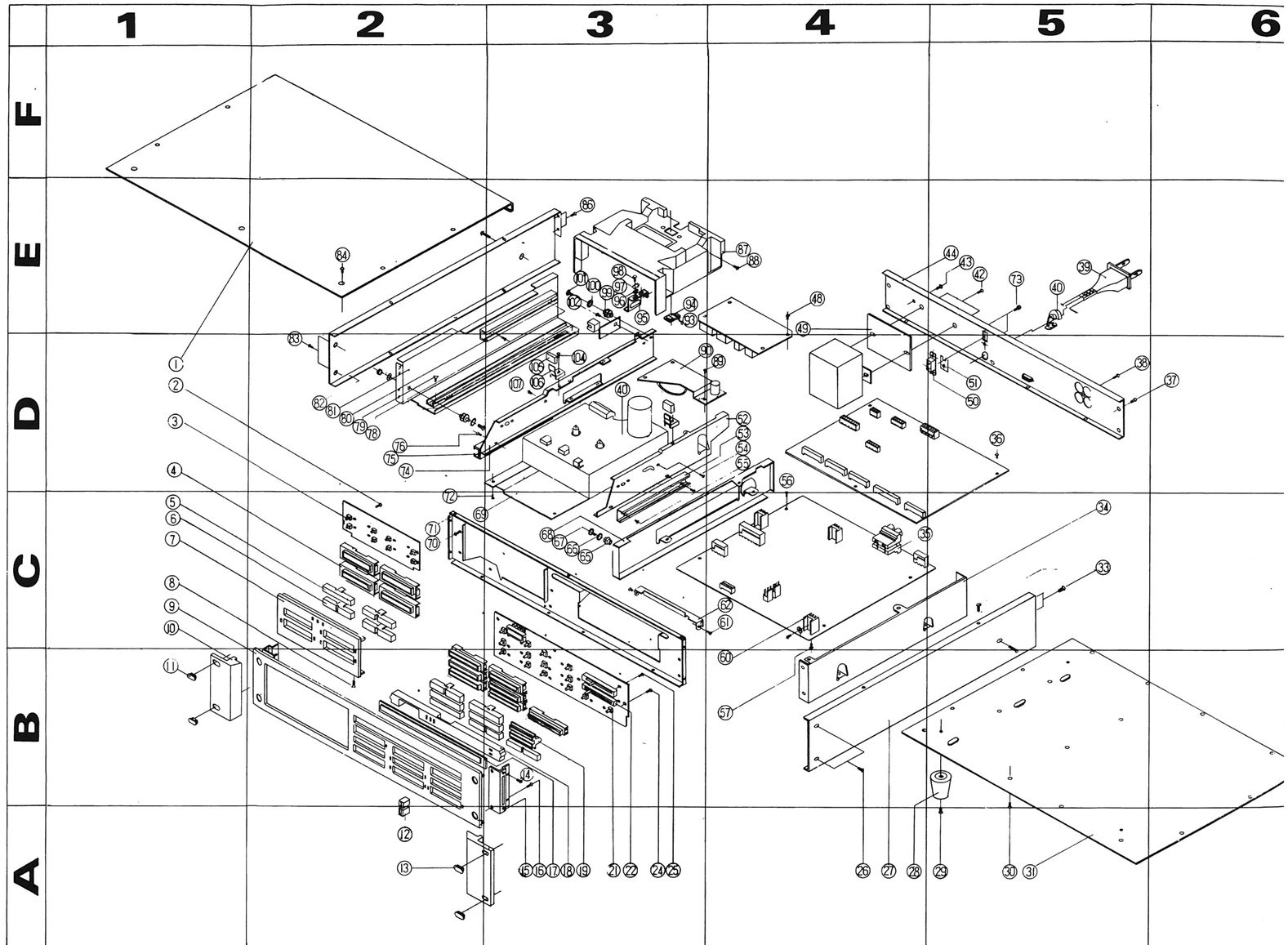

www.hifiengine.com

Parts List & Top View of P.C Boards

MAIN BOARD 4002313000

Ref No.	Parts No.	Description	Position
●IC			
IC402	2168611107	IC HA17810	E-2
IC401	2168600101	IC REGULATOR L7818	C-2
IC202	2128010004	IC HD14027B	E-5
IC404	〃	〃	C-1
IC203	2138011110	IC MC14093	E-5
IC403	〃	〃	C-1
IC201L/R	2168000106	IC TEA0665	B-2/A-4
●TRANSISTOR			
Q207	2208206105	TR PNP KTA 1015Y	D-5
Q306	〃	〃	D-3
Q308	〃	〃	D-4
Q310	〃	〃	D-5
Q312	〃	〃	D-5
Q319	〃	〃	D-3
Q327	〃	〃	E-4
Q329	〃	〃	E-3
Q401	〃	〃	D-2
Q404	〃	〃	D-2
Q406	〃	〃	D-1
Q409	〃	〃	C-1
Q309	2008209101	TR PNP MPS A55	D-4
Q405	〃	〃	D-2
Q415	〃	〃	C-2
Q103L/R	2208606104	TR NPN KTC 1815Y	A-4/A
Q104	〃	〃	E-4
Q202L/R	〃	〃	B-2/A-3
Q203	〃	〃	E-4
Q204	〃	〃	B-3
Q205	〃	〃	E-5
Q206	〃	〃	D-5
Q208	〃	〃	D-5
Q209	〃	〃	E-5
Q301L/R	〃	〃	C-4/B-3
Q302L/R	〃	〃	D-3/C-3
Q303L/R	〃	〃	D-3/C-3
Q304L/R	〃	〃	D-3/C-2
Q305L/R	〃	〃	C-3/C-3
Q307	〃	〃	D-4
Q311	〃	〃	D-5
Q315	〃	〃	E-3
Q316	〃	〃	D-5
Q317	〃	〃	E-3
Q318	〃	〃	E-3
Q320	〃	〃	D-3
Q321	〃	〃	D-4
Q324	〃	〃	D-4
Q326	〃	〃	E-4
Q328	〃	〃	E-3
Q402	〃	〃	D-2
Q403	〃	〃	D-2
Q408	〃	〃	C-1
Q410	〃	〃	C-1
Q411	〃	〃	D-2
Q412	〃	〃	C-2
Q413	〃	〃	D-2
Q414	〃	〃	C-2
Q416	〃	〃	B-1
Q419L/R	〃	〃	B-1/B-1
Q101L/R	2208606108	TR NPN KTC 2240 BL	D-4/D-5
Q102L/R	〃	〃	D-4/D-5
Q201	2008609101	TR NPN MPS A05	A-5
Q313	〃	〃	C-5
Q314	〃	〃	C-5
Q407	〃	〃	C-1
Q325	2028406113	TR NPN KTD 880Y	D-4
●DIODE			
D101	2058106100	Diode Rectifier 1N4002	C-4
D401	〃	〃	D-1
D402	〃	〃	D-1
D403	〃	〃	D-1
D404	〃	〃	D-1
D405	〃	〃	E-1
D406	〃	〃	E-1
D407	〃	〃	E1
D408	〃	〃	E-1
D409	〃	〃	E-1
D410	2058106100	Diode Rectifier 1N4002	E-1
D411	〃	〃	E-1
D412	〃	〃	E-1
D413	〃	〃	D-1
D203	2058306101	Diode 1N4148	E-4
D204	〃	〃	E-4
D303	〃	〃	E-4
D304	〃	〃	E-3
D305	〃	〃	E-4
D306	〃	〃	D-3
D307	〃	〃	D-5
D414	〃	〃	C-1
D415	〃	〃	C-1
D416	〃	〃	C-1
D417	〃	〃	B-1
D418	〃	〃	E-2
D419	〃	〃	D-1
D422	〃	〃	D-2
D424	〃	〃	C-2
D420	2058520100	Diode Zener WZ032	D-2
D421	〃	〃	D-2
D201	2058520108	Diode Zener WZ140	A-5
●COIL			
L301	2638601040	Coil OSC REC BIAS	B-5
L304L/R	2648601140	Coil Inductor 3.5mH	D-3/C-3
L303L/R	2648601220	Coil Inductor 6.3mH	D-3/C-3
L305L/R	2648601320	Coil Inductor 3mH	C-3/C-3
L201L/R	2648601410	Coil Inductor 36mH	B-2/C-1
L202L/R	2658301030	Coil FLTR DOLBY LPF	B-2/C-1
L203L/R	2658501020	Coil FLTR REC TRAP	C-5/C-5
●RESISTOR			
R115	3039470472	Resistor M.O 47 ohm 1WJ	A-5
R113L/R	3069100270	Resistor C.F 10 ohm ¼WJ	
R311L/R	〃	〃	
R337	〃	〃	
R416	3069101270	Resistor C.F 100 ohm ¼WJ	
R206L/R	3069102270	Resistor C.F 10K ohm ¼WJ	
R208L/R	〃	〃	
R320	〃	〃	
R321	〃	〃	
R349	〃	〃	
R351	〃	〃	
R404	〃	〃	
R413	〃	〃	
R112L/R	3069103270	Resistor C.F 10K ohm ¼WJ	
R114	〃	〃	
R118	〃	〃	
R116	〃	〃	
R205L/R	〃	〃	
R210L/R	〃	〃	
R220	〃	〃	
R222	〃	〃	
R223	〃	〃	
R224	〃	〃	
R227	〃	〃	
R237	〃	〃	
R302L/R	〃	〃	
R327	〃	〃	
R360	〃	〃	
R361	〃	〃	
R365	〃	〃	
R366	〃	〃	
R371	〃	〃	
R372	〃	〃	
R373	〃	〃	
R402	〃	〃	
R409	〃	〃	
R418	〃	〃	
R422	〃	〃	
R424	〃	〃	
R425	〃	〃	
R439	〃	〃	
R440	〃	〃	
R441	〃	〃	
R442	〃	〃	
R101L/R	3069104270	Resistor C.F 100K ohm ¼WJ	
R204L/R	〃	〃	
R362	〃	〃	
R363	〃	〃	
R364	3069104270	Resistor C.F 100K ohm ¼WJ	
R117L/R	3069105270	Resistor C.F 1M ohm ¼WJ	
R232	3069122270	Resistor C.F 1.2K ohm ¼WJ	
R239	〃	〃	
R374	〃	〃	
R201L/R	3069123270	Resistor C.C 12K ohm ¼WJ	
R426	3069152270	Resistor C.F 1.5K ohm ¼WJ	
R433	〃	〃	
R109L/R	3069153270	Resistor C.F 15K ohm ¼WJ	
R102L/R	3069221270	Resistor C.F 220 ohm ¼WJ	
R106L/R	3069222270	Resistor C.F 2.2K ohm ¼WJ	
R214L/R	〃	〃	
R358	〃	〃	
R217L/R	2069223270	Resistor C.F 22K ohm ¼WJ	
R218L/R	〃	〃	
R233	〃	〃	
R234	〃	〃	
R322	〃	〃	
R323	〃	〃	
R324	〃	〃	
R325	〃	〃	
R326	〃	〃	
R341	〃	〃	
R342	〃	〃	
R347	〃	〃	
R348	〃	〃	
R353	〃	〃	
R354	〃	〃	
R401	〃	〃	
R414	〃	〃	
R423	〃	〃	
R428	〃	〃	
R429	〃	〃	
R104L/R	3069224270	Resistor C.F 220K ohm ¼WJ	
R305L/R	〃	〃	
R314L/R	3069270270	Resistor C.F 27 ohm ¼WJ	
R202L/R	3069272270	Resistor C.F 2.7K ohm ¼WJ	
R219	〃	〃	
R301L/R	〃	〃	
R308L/R	〃	〃	
R103L/R	3069274270	Resistor C.F 270K ohm ¼WJ	
R310L/R	3069330270	Resistor C.F 33 ohm ¼WJ	
R107L/R	3069331270	Resistor C.F 330 ohm ¼WJ	
R110L/R	3069332270	Resistor C.F 3.3K ohm ¼WJ	
R207L/R	〃	〃	
R410	〃	〃	
R412	〃	〃	
R437L/R	〃	〃	
R211L/R	3069333270	Resistor C.F 33K ohm ¼WJ	
R436	3069334270	Resistor C.F 330K ohm ¼WJ	
R309L/R	3069392270	Resistor C.F 3.9K ohm ¼WJ	
R316L/R	〃	〃	
R108L/R	3069394270	Resistor C.F 390K ohm ¼WJ	
R111L/R	3069472270	Resistor C.F 4.7K ohm ¼WJ	
R203L/R	〃	〃	
R315L/R	〃	〃	
R343	〃	〃	
R344	〃	〃	
R221	3069473270	Resistor C.F ohm ¼WJ	
R225	〃	〃	
R228	〃	〃	
R227	〃	〃	
R226	〃	〃	
R228	〃	〃	
R229	〃	〃	
R230	〃	〃	
R231	〃	〃	
R235	〃	〃	
R236	〃	〃	
R238	〃	〃	
R306L/R	〃	〃	
R317L/R	〃	〃	
R318L/R	〃	〃	
R319L/R	〃	〃	
R340	〃	〃	
R345	〃	〃	
R346	〃	〃	
R350	〃	〃	
R352	〃	〃	
R359	〃	〃	
R405	〃	〃	
R406	3069473270	Resistor C.F ohm ¼WJ	
R408	〃	〃	
R411	〃	〃	
R417	〃	〃	
R419	〃	〃	
R420	〃	〃	
R421	〃	〃	
R427	〃	〃	
R430	〃	〃	
R431	〃	〃	
R432	〃	〃	
R434	〃	〃	
R535	〃	〃	
R215L/R	3069512270	Resistor C.F 5.1K ohm ¼WJ	
R105L/R	3069562270	Resistor C.F 5.6K ohm ¼WJ	
R209L/R	〃	〃	
R403	〃	〃	
R338	3069563270	Resistor C.F 56K ohm ¼WJ	
R339	〃	〃	
R304L/R	3069682270	Resistor C.F 6.8K ohm ¼WJ	
R312L/R	〃	〃	
R313L/R	〃	〃	
R216L/R	3069683270	Resistor C.F 68K ohm ¼WJ	
R303L/R	3069822270	Resistor C.F 8.2K ohm ¼WJ	
R307L/R	〃	〃	
R212L/R	3069823270	Resistor C.F 82K ohm ¼WJ	
R213L/R	〃	〃	
R407	3069824270	Resistor C.F 820K ohm ¼WJ	
R415	〃	〃	
VR301L/R	3248310320	Resistnr Semi CS 10KB 10/5	B-4/B-4
VR302L/R	3248310420	Resistor Semi CS 100KB 10/5	C-5/B-5
VR303	〃	〃	D-3
VR304	〃	〃	D-3
VR101L/R	3248322320	Resistor Semi CS22KB 10/5	B-1/A-4
●CAPACITOR			
C110	3479210061	Cap Elect AF SA 10uF 35V	
C203L/R	〃	〃	
C206L/R	〃	〃	
C214L/R	〃	〃	
C216L/R	〃	〃	
C218L/R	〃	〃	
C219L/R	〃	〃	
C222	〃	〃	
C322	〃	〃	
C405	〃	〃	
C408	〃	〃	
C409	〃	〃	
C411	〃	〃	
C221	3479210131	Cap Elect AF SA 100uF 16V	
C402	3409210241	Cap Elect SA SA 1000uF 25V	
C401	3409210261	Bap Elect AF SA 1000uF 35V	
C224	3479210971	Cap Elect AF SA 1uF 50V	
C225	〃	〃	
C406	〃	〃	
C313	3479222121	Cap Elect AF SA 220uF 10V	
C210L/R	3409222131	Cap Elect AF SA 220uF 16V	
C208L/R	3479222871	Cap Elect AF SA 0.22uF 50V	
C212L/R	〃	〃	
C303L/R	〃	〃	
C407	3479222971	Cap Elect AF SA 2.2uF 50V	
C105L/R	3479233031	Cap Elect AF SA 33uF 10V	
C307L/R	〃	〃	
C104L/R	3479233041	Cap Elect AF SA 33uF 25V	
C300	3409233141	Cap Elect AF SA 330uF 25V	
C410	3479247041	Cap Elect AF SA 47uF 25V	
C403	3409247131	Cap Elect AF SA 470uF 16V	
C111	3409247141	Cap Elect AF SA 470uF 25V	
C102L/R	3479247971	Cap Elect AF SA 4.7uF 50V	
C108L/R	〃	〃	
C201L/R	〃	〃	
C220L/R	〃	〃	
C304L/R	〃	〃	
C305L/R	〃	〃	
C209L/R	3479268871	Cap Elect AF SA 0.68uF 50V	
C211L/R	〃	〃	
C106L/R	3579101130	Cap Ceramic 100pF 50VJ	
C412	3579104530	Cap Ceramic 0.1uF 50VJ	
C103L/R	3579470130	Cap Ceramic 47uF 50VJ	
C101L/R	3579681230	Cap Ceramic 680uF 50VK	
C202L/R	3679102120	Cap Mylar 0.001uF 100VJ	
C107L/R	3679103120	Cap Mylar 0.01uF 100VJ	
C312L/R	〃	〃	
C217L/R	〃	〃	
C108L/R	3679153120	Cap Mylar 0.01uF 100VJ	
C308L/R	〃	〃	
C310L/R	〃	〃	
C203L/R	3679182120	Cap Mylar 0.0018uF 100VJ	
C311L/R	3679223120	Cap Mylar 0.022uF 100VJ	
C309L/R	3679273120	Cap Mylar 0.027uF 100VJ	
C319	〃	〃	
C205L/R	3679472120	Cap Mylar 0.0047uF 100VJ	
C215L/R	〃	〃	
C207L/R	3679473120	Cap Mylar 0.047uF 100VJ	
C213L/R	〃	〃	
C301L/R	3679682120	Cap Mylar 0.0068uF 100VJ	
C302L/R	3679822120	Cap Mylar 0.0082uF 100VJ	
C320	〃	〃	
C321	〃	〃	
C317	3619471110	Cap Poly 470pF 50VJ	
C318	〃	〃	
C316	3619682130	Cap Poly 6800PF 160VJ	
●RELAY			
RELAY401	5528001030	RELAY VB-12MB 12VDC	D-1
RELAY101	5528001310	RELAY RZ-24W	B-4
●FUSE			
FS402	5508211031	Fuse NB 31.8 0.16A 250V	E-1
FS401	5508211631	Fuse NB 31.8 0.5A 250V	E-1

www.hifiengine.com

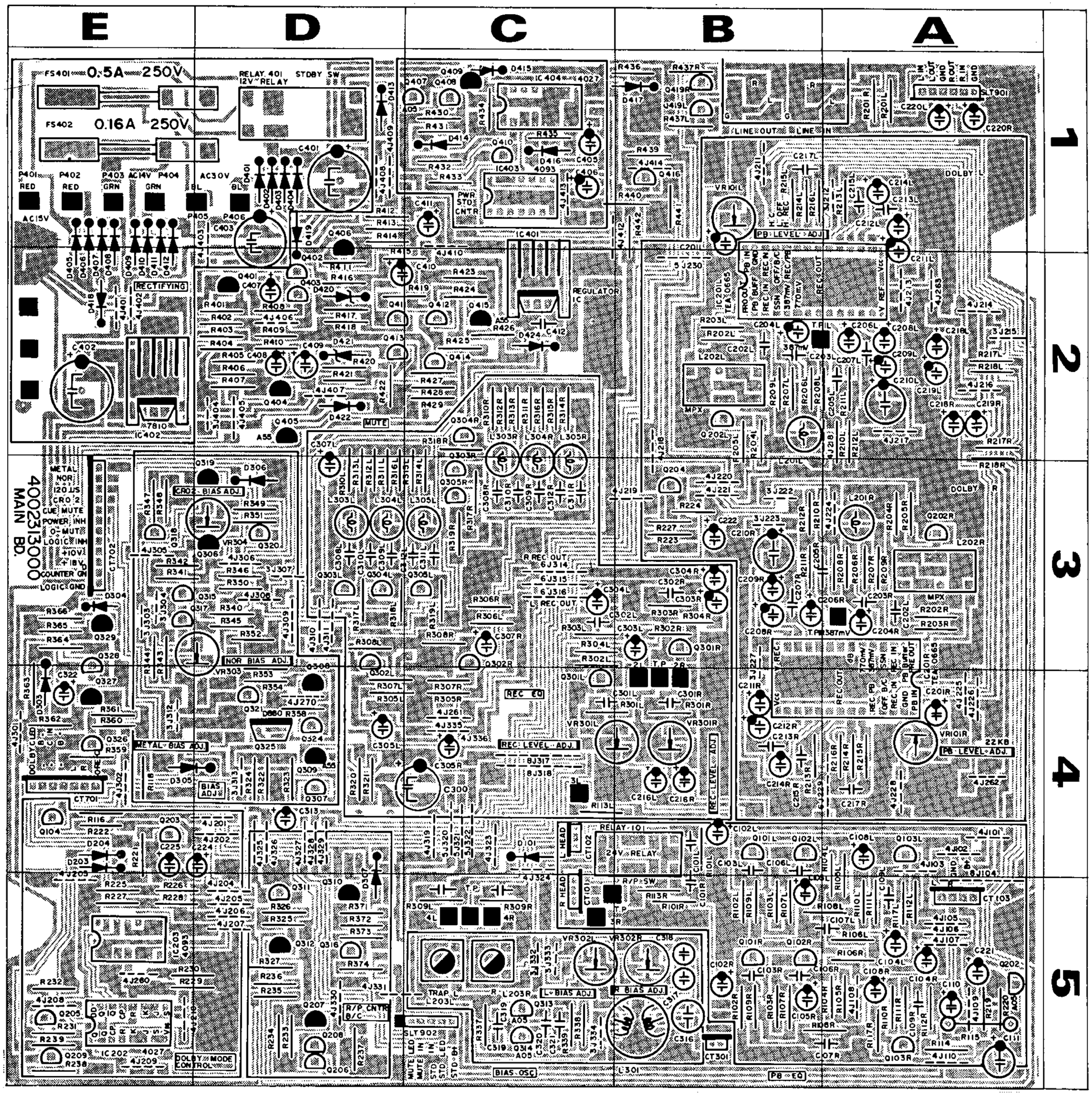

www.hifiengine.com

Parts List & Top View of P.C Boards

CONTROL BOARD 4002313100

Ref No.	Parts No.	Description	Position
●IC			
IC701	2108011101	IC HD38755A58	B-1
IC708	2138007109	IC TC9121	B-4
IC702	2138011101	IC HD14011 B	B-2
IC703	〃	〃	B-2
IC710	〃	〃	C-4
IC713	〃	〃	A-4
IC716	〃	〃	B-5
IC711	2138011102	IC HD14001 B	B-4
IC712	〃	〃	B-4
IC714	〃	〃	A-5
IC715	〃	〃	A-5
IC707	2138011104	IC HD 14027B	C-3
IC709	〃	〃	D-3
IC717	2138011105	IC HD14043	B-5
IC705	2138011110	IC MC 14093	C-3
IC706	2138011111	IC HD 14510B	B-3
IC704	2138011112	IC HD14555B	C-2
IC719	2168017102	IC LB1412	D-4
IC720	〃	〃	D-5
IC718	2168022105	IC BA336	C-5
●TRANSISTOR			
Q732	2208206105	TR PNP KTA 1015Y	A-5
Q709	2008209101	TR PNP MPS A55	C-1
Q710	〃	〃	D-1
Q711	〃	〃	D-1
Q712	〃	〃	D-1
Q701	2008606104	TR NPN KTC 1815Y	D-1
Q702	〃	〃	D-1
Q703	〃	〃	D-1
Q704	〃	〃	D-1
Q705	〃	〃	D-1
Q706	2008606104	TR NPN KTC 1815Y	D-1
Q707	〃	〃	D-1
Q708	〃	〃	D-1
Q713	〃	〃	C-2
Q714	〃	〃	D-2
Q715	〃	〃	D-2
Q717	〃	〃	D-2
Q718	〃	〃	D-2
Q719	〃	〃	C-2
Q720	〃	〃	C-3
Q721	〃	〃	C-3
Q722	〃	〃	D-3
Q723	〃	〃	D-3
Q724	〃	〃	B-2
Q725	〃	〃	B-2
Q726	〃	〃	C-1
Q727	〃	〃	C-2
Q728	〃	〃	C-2
Q729	〃	〃	B-2
Q730	〃	〃	B-3
Q731	〃	〃	B-4
Q733	〃	〃	C-5
Q734	〃	〃	C-5
Q735	〃	〃	C-5
●DIODE			
D701	2058306101	Diode 1N4148	B-1
D702	〃	〃	C-2
D703	〃	〃	C-2
D704	〃	〃	C-2
D705	〃	〃	B-2
D706	〃	〃	B-2
D707	〃	〃	B-1
D708	〃	〃	B-2
D709	〃	〃	B-2
D710	〃	〃	B-3
D711	〃	〃	B-3
D712	〃	〃	B-3
D713	〃	〃	B-3
D714	〃	〃	C-3
D715	〃	〃	C-3
D716	〃	〃	C-3
D717	〃	〃	C-3
D718	〃	〃	C-3
D719	〃	〃	C-3

Ref No.	Parts No.	Description	Position
D720	2058306101	Diode 1N4148	C-3
D721	〃	〃	C-3
D722	〃	〃	A-3
D723	〃	〃	A-3
D724	〃	〃	B-3
D800	2058306101	Diode 1N4148	C-2
D726	〃	〃	B-3
D727	〃	〃	B-3
D750	〃	〃	C-1
D729	〃	〃	B-4
D751	〃	〃	C-3
D731	〃	〃	A-5
D732	〃	〃	A-5
D733	〃	〃	A-5
D734	〃	〃	B-4
D735	〃	〃	B-4
D736	〃	〃	B-5
D737	〃	〃	B-5
D734	〃	〃	B-5
D739	〃	〃	B-5
D740	〃	〃	B-5
D741	〃	〃	B-5
D742	〃	〃	B-5
D743	〃	〃	C-4
D744	〃	〃	C-4
D745	〃	〃	D-4
●RESISTOR			
R782	3069102270	Resistor C.F 1K ohm ¼WJ	
R721	3069203270	Resistor C.F 10K ohm ¼WJ	
R722	〃	〃	
R723	〃	〃	
R724	〃	〃	
R725	〃	〃	
R726	〃	〃	
R727	〃	〃	
R728	〃	〃	
R807	3069103270	Resistor C.F 10K ohm ¼WJ	
R811	〃	〃	
R813	〃	〃	
R732	3069104270	Resistor C.F 100K ohm ¼WJ	
R777	〃	〃	
R778	〃	〃	
R818	〃	〃	
R733	3069105270	Resistor C.F 1M ohm ¼WJ	
R701	3069122270	Resistor C.F 1.2K ohm ¼WJ	
R702	〃	〃	
R703	〃	〃	
R704	〃	〃	
R705	〃	〃	
R706	〃	〃	
R707	〃	〃	
R708	〃	〃	
R752	〃	〃	
R753	〃	〃	
R754	〃	〃	
R767	〃	〃	
R769	〃	〃	
R793	〃	〃	
R794	〃	〃	
F795	〃	〃	
R796	〃	〃	
R801	〃	〃	
R802	〃	〃	
R803	〃	〃	
R804	〃	〃	
R809	3069223270	Resistor C.F 22K ohm ¼WJ	
R810	〃	〃	
R791	3069224270	Resistor C.F 220K ohm ¼WJ	
R797	〃	〃	
R799	〃	〃	
R788	3069392270	Resistor C.F 3.9K ohm ¼WJ	
R789	〃	〃	
R786	3069183270	Resistor C.F 18K ohm ¼WJ	
R787	〃	〃	
R790	3069393260	Resistor C.F 39K ohm ¼WJ	
R800	〃	〃	
R806	3069333270	Resistor C.F 4.7K ohm ¼WJ	
R730	〃	〃	
R731	〃	〃	
R738	〃	〃	

www.hifiengine.com

Ref No.	Parts No.	Description	Position
R739	3069333270	Resistor C.F 4.7K ohm ¼ WJ	
R781	〃	〃	
R783	〃	〃	
R709	3069473270	Resistor C.F 47K ohm ¼ WJ	
R710	〃	〃	
R711	〃	〃	
R712	〃	〃	
R713	〃	〃	
R714	〃	〃	
R715	〃	〃	
R716	〃	〃	
R717	〃	〃	
R718	〃	〃	
R719	〃	〃	
R720	〃	〃	
R734	〃	〃	
R735	〃	〃	
R736	〃	〃	
R740	〃	〃	
R741	〃	〃	
R742	〃	〃	
R743	〃	〃	
R744	〃	〃	
R745	〃	〃	
R746	〃	〃	
R747	〃	〃	
R748	〃	〃	
R749	〃	〃	
R750	〃	〃	
R751	〃	〃	
R755	〃	〃	
R756	〃	〃	
R757	〃	〃	
R758	〃	〃	
R759	〃	〃	
R760	〃	〃	
R761	〃	〃	
R762	〃	〃	
R763	〃	〃	
R764	〃	〃	
R765	〃	〃	
R766	〃	〃	
R768	〃	〃	
R770	〃	〃	
R771	〃	〃	
R772	〃	〃	
R773	〃	〃	
R774	〃	〃	
R776	〃	〃	
R779	〃	〃	
R780	〃	〃	
R812	〃	〃	
R814	〃	〃	
R815	〃	〃	
R816	〃	〃	
R817	〃	〃	
R820	3069473270	Resistor C.F 47K ohm ¼ WJ	
R821	〃	〃	
R822	〃	〃	
R819	3069474270	Resistor C.F 470K ohm ¼ WJ	
R785	3069562270	Resistor C.F 5.6K ohm ¼ WJ	
R798	〃	〃	
R737	3069681270	Resistor C.F 680 ohm ¼ WJ	
R792	〃	〃	
R805	〃	〃	
R724	〃	〃	
R727	〃	〃	
●CAPACITOR			
C711	3479210061	Cap Elect AF SA 10uF 35V	
C712	〃	〃	
C713	〃	〃	
C720	〃	〃	
C722	〃	〃	
C705	3479210971	Cap Elect AF SA 1uF 50V	
C706	〃	〃	
C707	〃	〃	
C708	〃	〃	
C716	〃	〃	
C717	〃	〃	
C718	〃	〃	

Ref. No.	Parts No.	Description	Position
C719	3479210971	Cap Elect AF SA 1uF 50V	
C714	3479222871	Cap Elect AF SA 0.02uF 50V	
C715	〃	〃	
C710	3479222971	Cap Elect AF SA 2.2uF 50V	
C723	〃	〃	
C726	〃	〃	
C704	3479247971	Cap Elect AF SA 4.7uF 50V	
C725	〃	〃	
C728	〃	〃	
C702	3579151130	Cap Ceramic 150pF 50VJ	
C703	〃	〃	
C701	3938001002	Resistor Ceramic KBRC100B	

FUSE BOARD 4003311700

Ref. No.	Parts No.	Description	Position
	4003311700	Fuse Board	

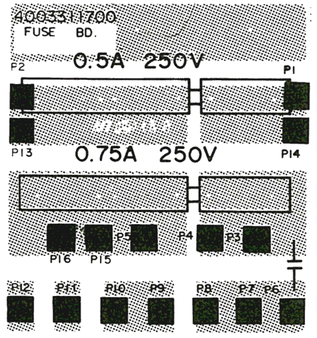

FUSE BOARD 4003311700

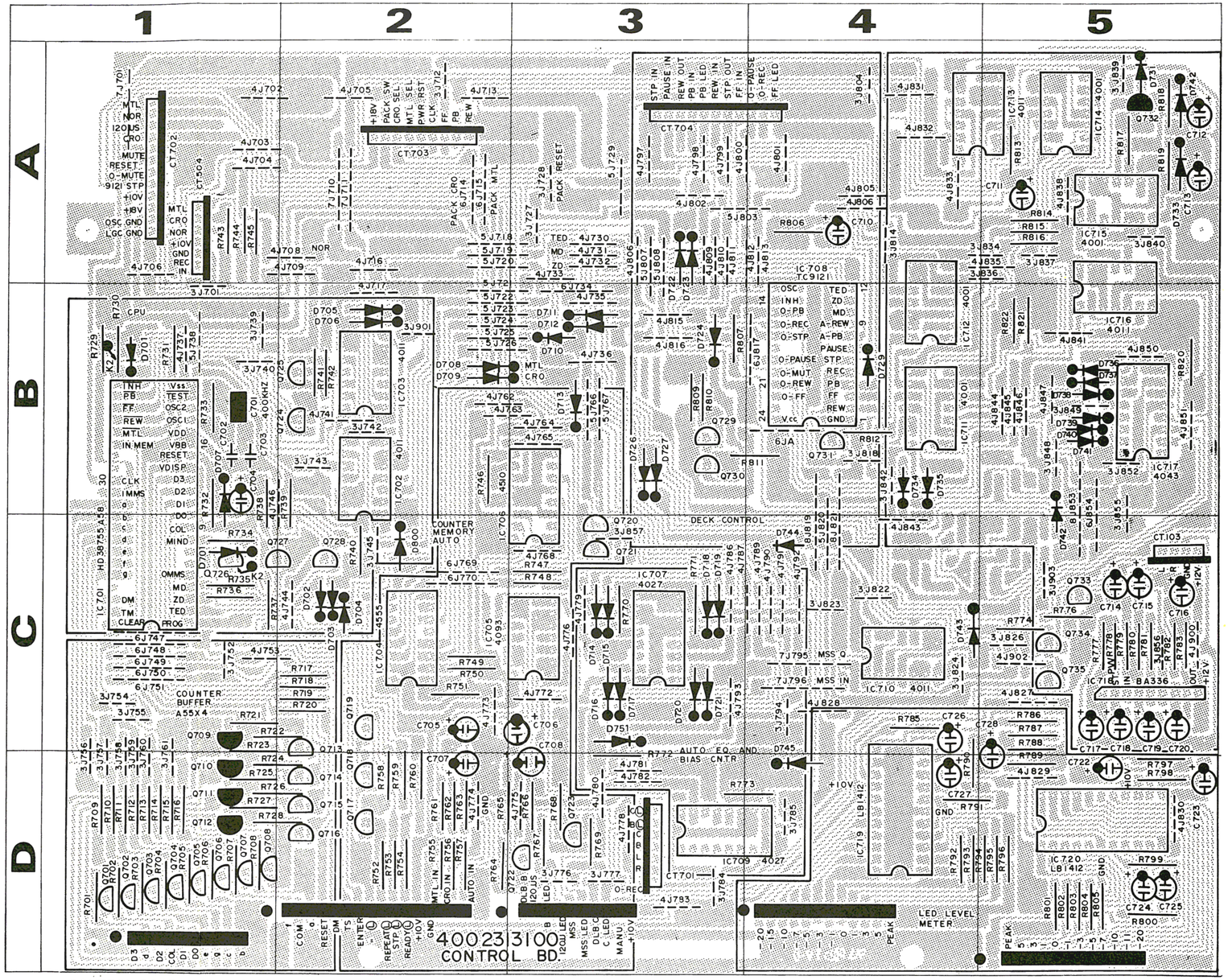

CONTROL BOARD 4002313100

www.hifiengine.com

Schematic Diagram

C102

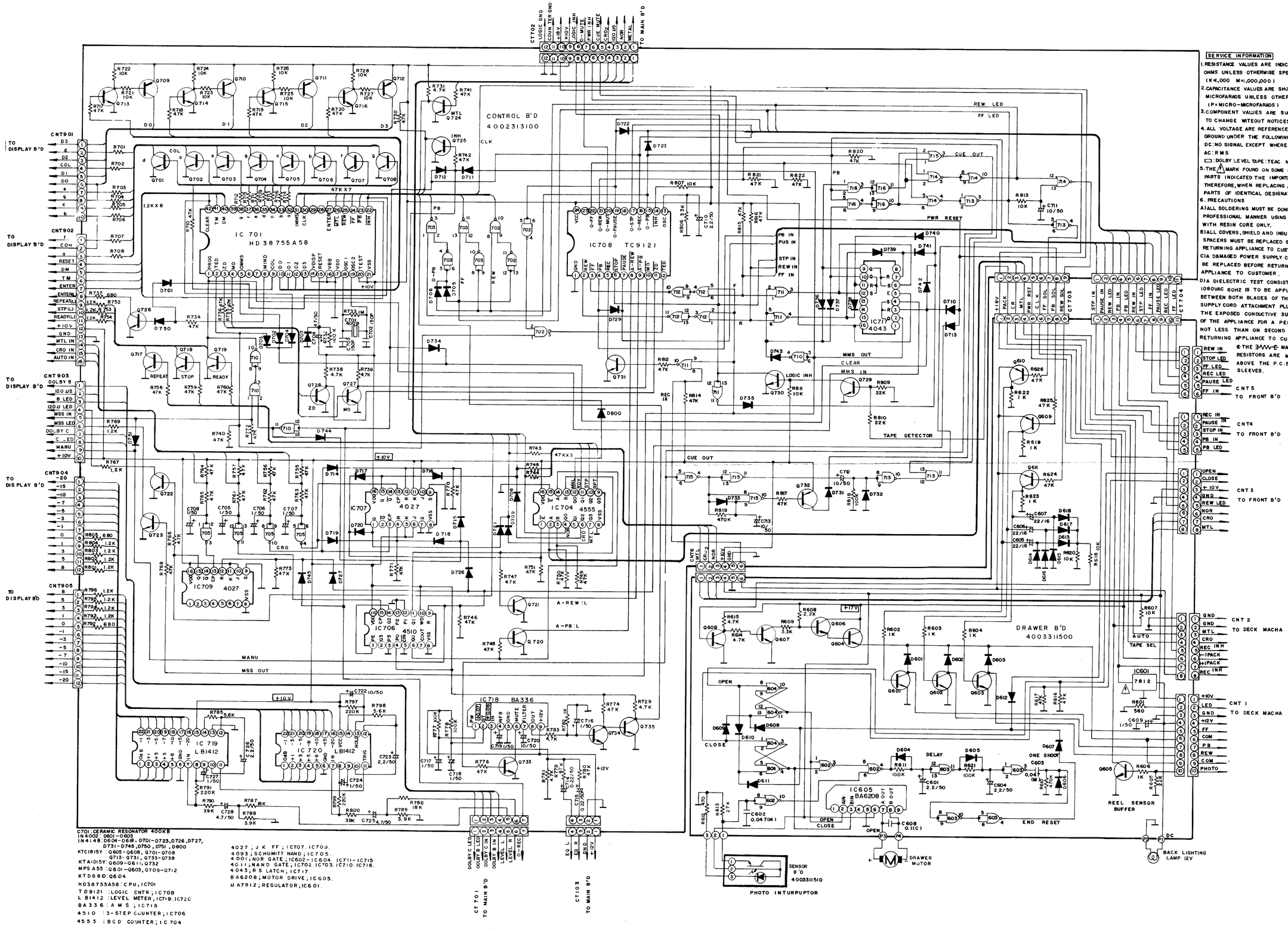

SERVICE INFORMATION

1. RESISTANCE VALUES ARE INDICATED IN OHMS UNLESS OTHERWISE SPECIFIED. (K=1,000 M=1,000,000)
2. CAPACITANCE VALUES ARE SHOWN IN MICROFARADS UNLESS OTHERWIRE NOTED. (P=MICRO-MICROFARADS)
3. COMPONENT VALUES ARE SUBJECTED TO CHANGE WITEOUT NOTICES.
4. ALL VOLTAGE ARE REFERENCED TO GROUND UNDER THE FOLLOWING CONDITUNS: DC:NO SIGNAL EXCEPT WHERE INDICATED, AC:RMS
   ▭ :DOLBY LEVEL TAPE:TEAC MTT-150
5. THE ⚠ MARK FOUND ON SOME COMPONENT PARTS INDICATED THE IMPORTANCE OF THEREFORE, WHEN REPLACING, BE SURE PARTS OF IDENTICAL DESIGNATION.
6. PRECAUTIONS
   A) ALL SOLDERING MUST BE DONE IN A PROFESSIONAL MANNER USING SOLDER WITH RESIN CORE ONLY.
   B) ALL COVERS, SHIELD AND INSULATING SPACERS MUST BE REPLACED BEFORE RETURNING APPLIANCE TO CUSTOMER.
   C) A DAMAGED POWER SUPPLY CORD MUST BE REPLACED BEFORE RETURNING APPLIANCE TO CUSTOMER.
   D) A DIELECTRIC TEST CONSISTING OF 1080VAC 60HZ IS TO BE APPLIED BETWEEN BOTH BLADES OF THE POWER SUPPLY CORD ATTACHMENT PLUG AND THE EXPOSED CONDUCTIVE SURFACE OF THE APPLIANCE FOR A PERIOD OF NOT LESS THAN ON SECOND BEFORE RETURNING APPLIANCE TO CUSTOMER.
   ※ THE ⚠ MARKED RESISTORS ARE MOUNTED ABOVE THE P.C.B ON SLEEVES.

C701 :CERAMIC RESONATOR 400KB
IN4002 :D601-D603
IN4148 :D604-D618, D701-D723, D726, D727, D731-D745, D750, D751, D800
KTC1815Y :Q605-Q608, Q701-Q708, Q713-Q731, Q733-Q738
KTA1015Y :Q609-Q611, Q732
MPS A55 :Q601-Q603, Q709-Q712
KTD880 :Q604
HD38755A58 :CPU, IC701
TD9121 :LOGIC CNTR; IC708
L B1412 :LEVEL METER; IC719, IC720
BA336 :A M S ; IC718
4510 :3-STEP COUNTER; IC706
4555 :BCD COUNTER; IC704

4027 ; J K FF ; IC707, IC709.
4093 ; SCHUMITT NAND ; IC705.
4001 ; NOR GATE ; IC602-IC604, IC711-IC715
4011 ; NAND GATE ; IC702, IC703, IC710, IC716.
4043 ; R S LATCH ; IC717.
BA6208 ; MOTOR DRIVE ; IC605.
μA7812 ; REGULATOR ; IC601.

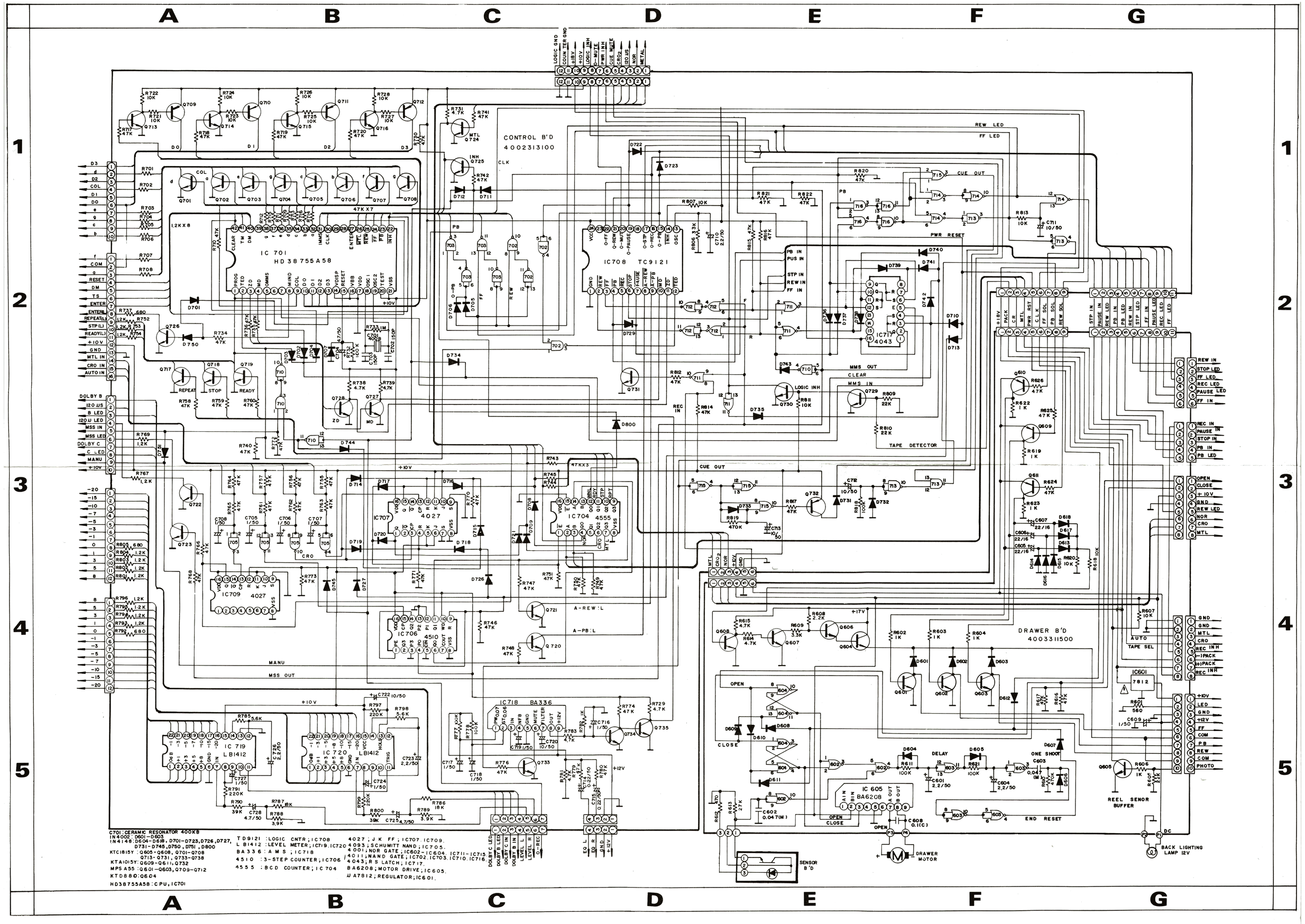

C701 : CERAMIC RESONATOR 400KB
IN4002 : D601 – D603
IN4148 : D604 – D618, D701 – D723, D726, D727, D731 – D745, D750, D751, D800
KTC1815Y : Q605 – Q608, Q701 – Q708, Q713 – Q731, Q733 – Q738
KTA1015Y : Q609 – Q611, Q732
MPS A55 : Q601 – Q603, Q709 – Q712
KTD880 : Q604
HD38755A58 : CPU, IC701

TD9121 : LOGIC CNTR ; IC708
L B1412 : LEVEL METER ; IC719, IC720
BA336 : A M S ; IC718
4510 : 3-STEP COUNTER ; IC706
4555 : BCD COUNTER ; IC704
4027 ; J K FF ; IC707, IC709.
4093 ; SCHUMITT NAND ; IC705.
4001 ; NOR GATE ; IC602 – IC604, IC711 – IC715
4011 ; NAND GATE ; IC702, IC703, IC710, IC716.
4043 ; R S LATCH ; IC717.
BA6208 ; MOTOR DRIVE ; IC605.
μA7812 ; REGULATOR ; IC601.

Schematic Diagram

SERVICE INFORMATION

1. RESISTANCE VALUES ARE INDICATED IN OHMS UNLESS OTHERWISE SPECIFIED. (K=1,000, M=1,000,000)
2. CAPACITANCE VALUES ARE SHOWN IN MICROFARADS UNLESS OTHERWISE NOTED. (P=MICRO-MICRO FARADS)
3. COMPONENT VALUES ARE SUBJECT TO CHANGE WITHOUT NOTICES.
4. ALL VOLTAGES ARE REFERENCE TO GROUND UNDER THE FOLLOWING CONDITIONS.
   DC: NO SIGNAL EXCEPT WHERE INDICATED
   AC: R M S (AT 1KHZ, 80HM LOAD, FULL SIGNAL)
5. THE ⚠ MARK FOUND ON SOME COMPONENT PARTS INDICATES THE IMPORTANCE OF THE SAFETY FACTOR OF THE PARTS. THEREFORE, WHEN REPLACING, BE SURE TO USE PARTS OF IDENTICAL DESIGNATION.
6. "PRECAUTION"
   A) ALL REPLACEMENT COMPONENT IDENTIFIED BY ⚠ MUST BE REPLACED ONLY WITH ORIGINAL TYPE SPECIFIED BY THE MANUFACTURER, AND INSTALLED AS THE ORIGINAL WITH SPACERS AND POSITIONED AWAY FORM ADJACENT COMPONENTS WHERE APPLICABLE.
   B) ALL SOLDERING MUST BE DONE IN A PROFESSIONAL MANNER USING SOLDER WITH ROSIN CORE ONLY
   C) ALL COVERS, SHIELDS AND INSULATING SPACERS MUST BE REPLACED BEFORE RETURNING APPLIANCE TO CUSTOMER.
   D) A DAMAGED POWER SUPPLY CORD MUST BE REPLACED BEFORE RETURNING APPLIANCE TO CUSTOMER.
   E) A DIELECTRIC TEST CONSISTING OF 1080V AC 60~ IS TO BE APPLIED BETWEEN BOTH BLADES OF THE POWER SUPPLY CORD ATTACHMENT PLUG AND THE EXPOSED CONDUCTIVE SURFACE OF THE APPLIANCE FOR A PERIOD OF NOT LESS THAN ONE SECOND BEFORE RETURNING APPLIANCE TO CUSTOMER.
7. THE 3W-E MARKED RESISTANCE ARE MOUNTED ABOVE P.C.B ON SLEEVES.

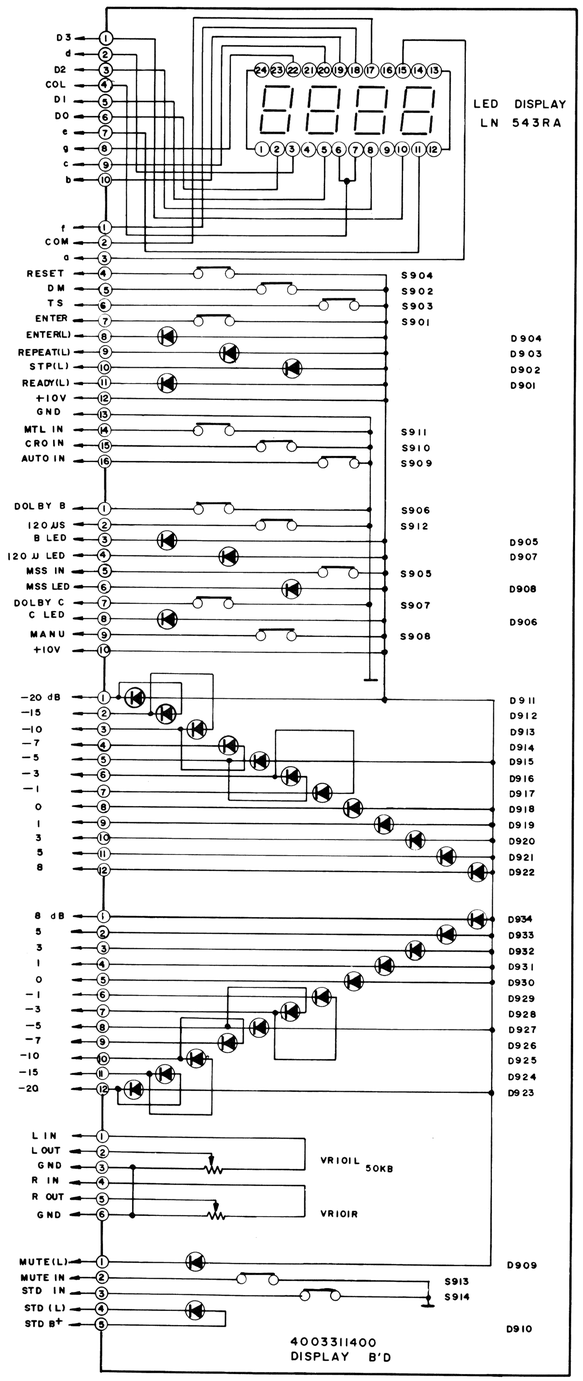

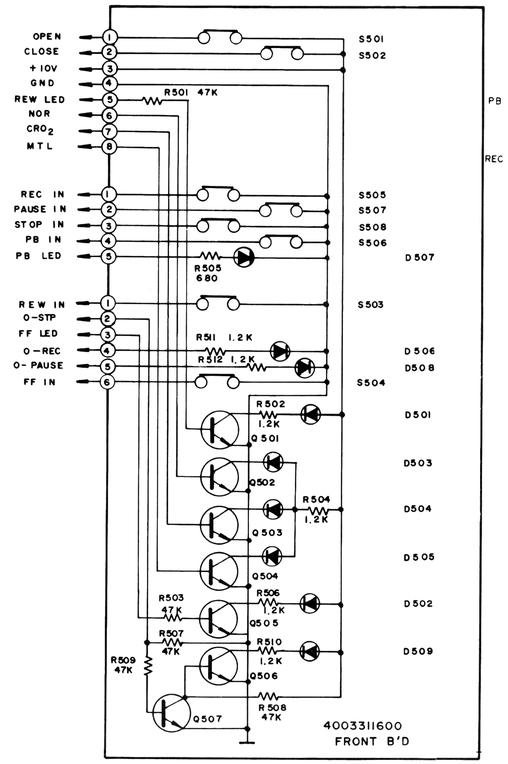

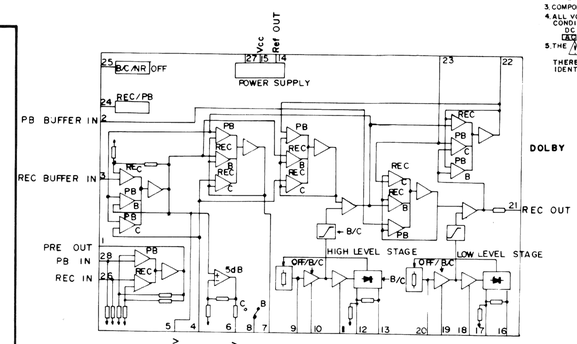

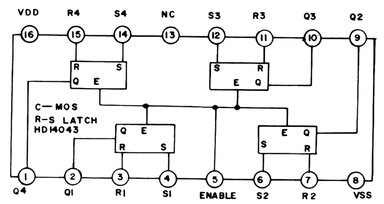

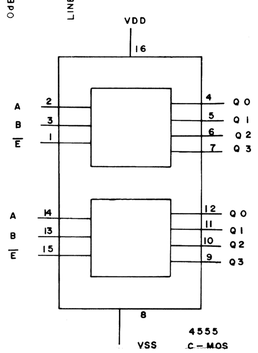

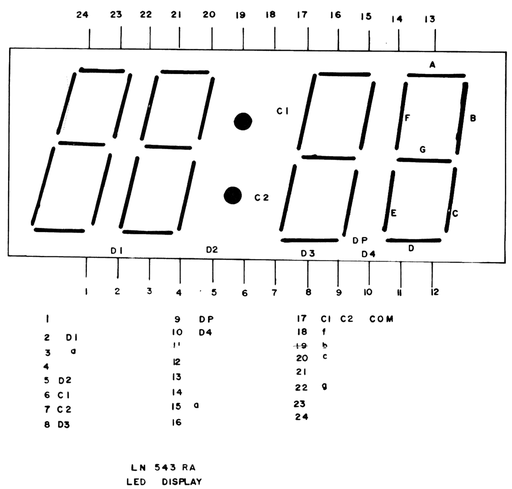

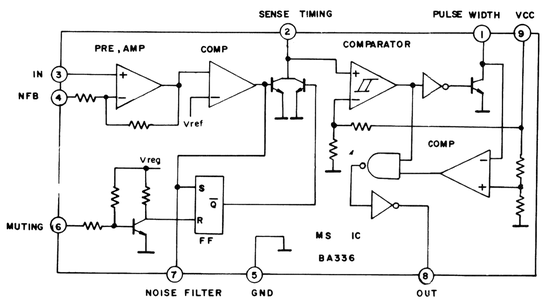

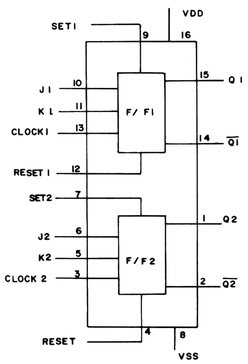

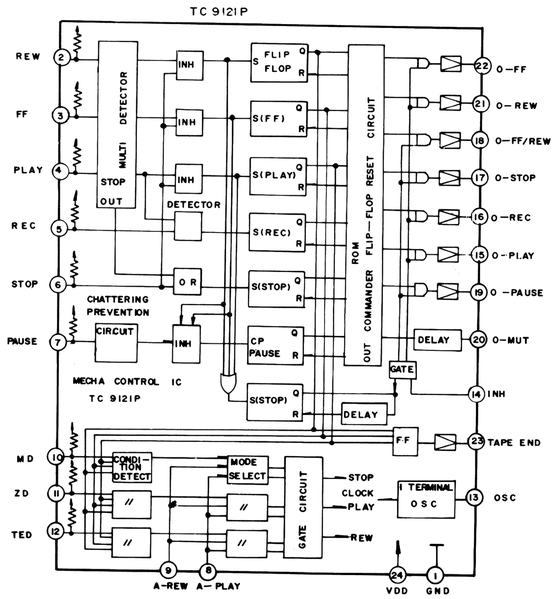

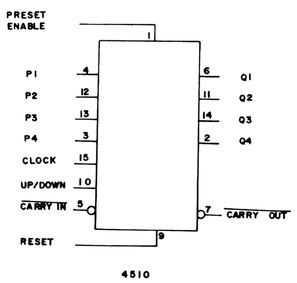

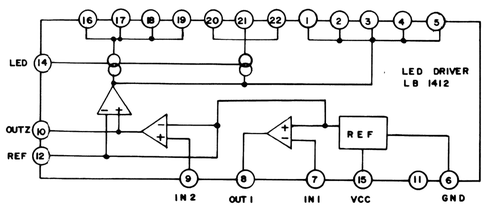

LED SLP 237 B; GREEN; D507, D904-D906, D911-D918, D923-D930.

LED SLP137B; RED; D501-D506, D508, D509, D901-D903, D909, D910, D919-D922, D931-D934

KTC 1815Y: Q501-Q507

Schematic Diagram

C102
No.3

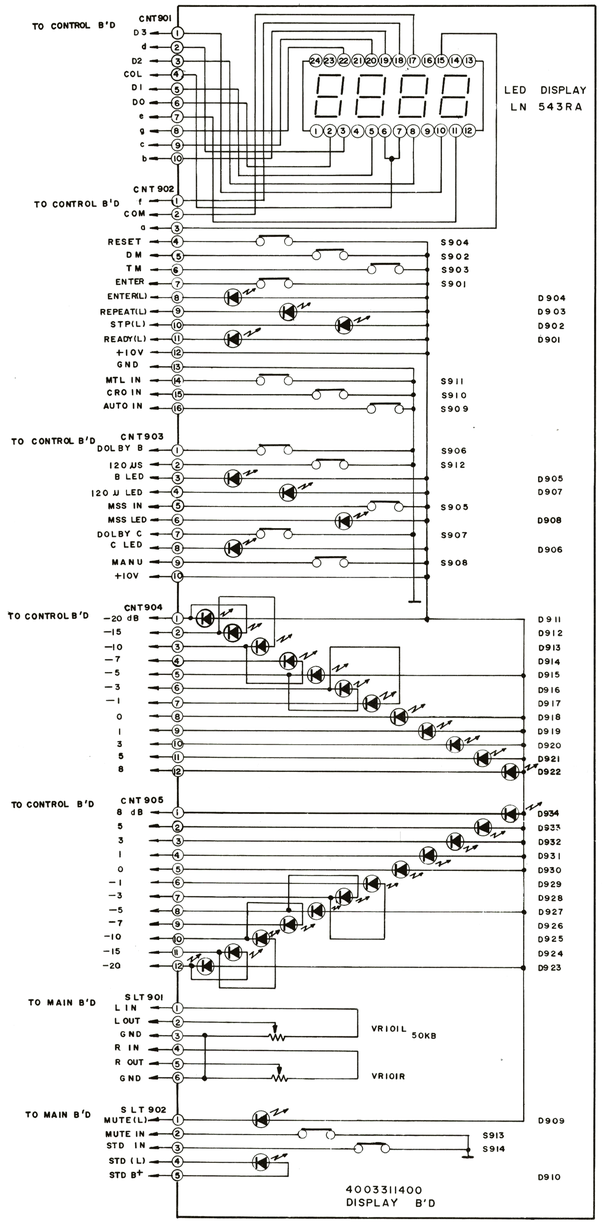

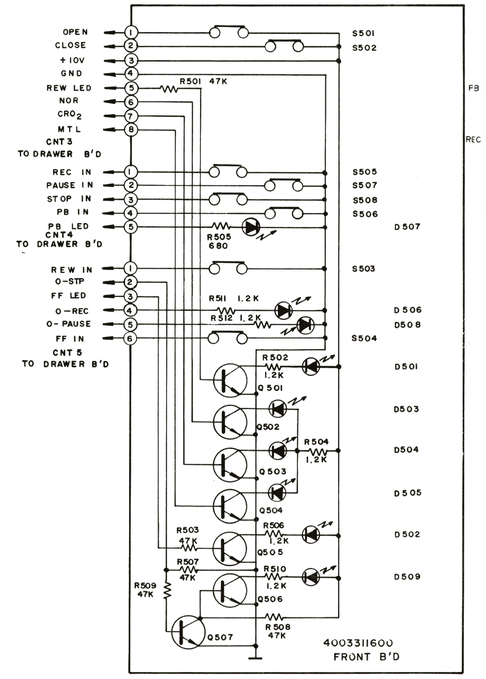

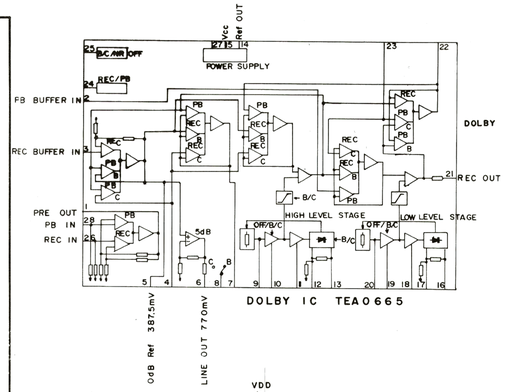

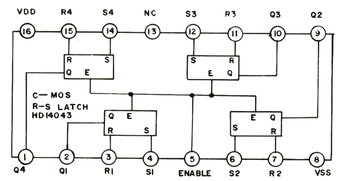

TRUTH TABLE

S	R	E	Q
X	X	0	HIGH IMPEDANCE
0	0	1	NO CHANGE
0	1	1	0
1	0	1	1
1	1	1	1

X = DON'T CARE

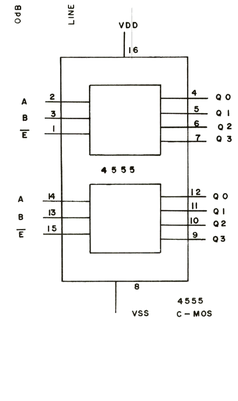

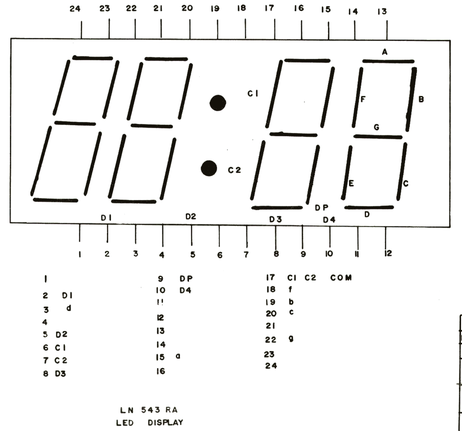

4555
CMOS
BINARY TO 1 OF 4 DECODER
TRUTH TABLE

INPUTS			OUTPUTS			
ENABLE	SELECT					
E	B	A	Q3	Q2	Q1	Q0
0	0	0	0	0	0	1
0	0	1	0	0	1	0
0	0	0	0	0	0	1
0	0	1	0	0	1	0
0	1	0	0	1	0	0
0	1	1	1	0	0	0
1	X	X	0	0	0	0

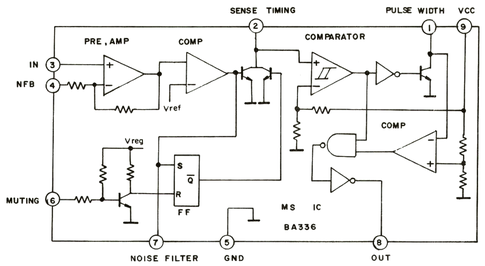

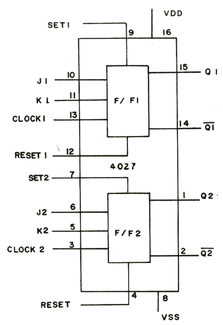

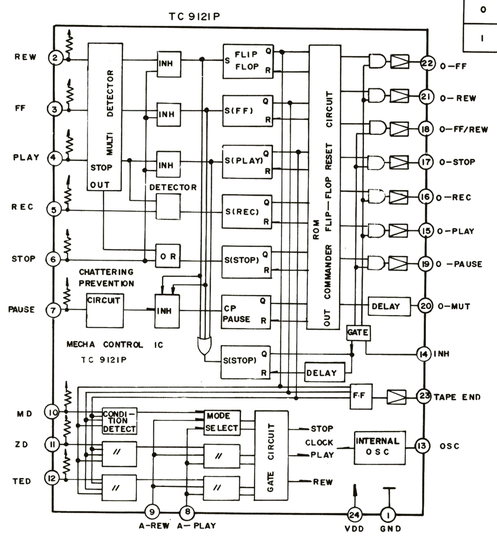

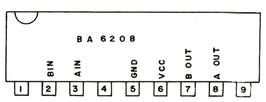

LED SLP 237 B ; GREEN ; D507, D904 - D906, D911 - D918, D923 - D930.

LED SLP137B ; RED ; D501 - D506, D508, D509, D901 - D903, D909, D910, D919 - D922, D931 - D934

KTC 1815Y : Q501 - Q507

CRUTH TABLE

INPUT		OUTPUT		OUTPUT OPERATING MODE
A	B	A	B	
1	1	L	L	MOTOR SHORT
1	0	H	L	FORWARD
0	1	L	H	REVERSE
0	0	—	—	MOTOR OPEN

1 : 2V MIN
0 : 0.8V MAX

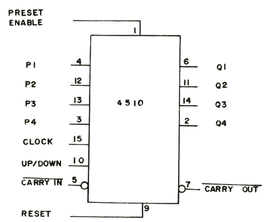

4510
UP/DOWN COUNTER

TRUTH TABLE

CARRYIN	UP DOWN	PRESET ENABLE	RESET	ACTION
1	X	0	0	NO COUNT
0	1	0	0	UP
0	0	0	0	DOWN
X	X	1	0	PRESET
X	X	X	1	RESET

X = DON'T CARE

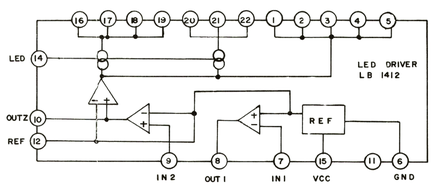

Schematic Diagram

C102

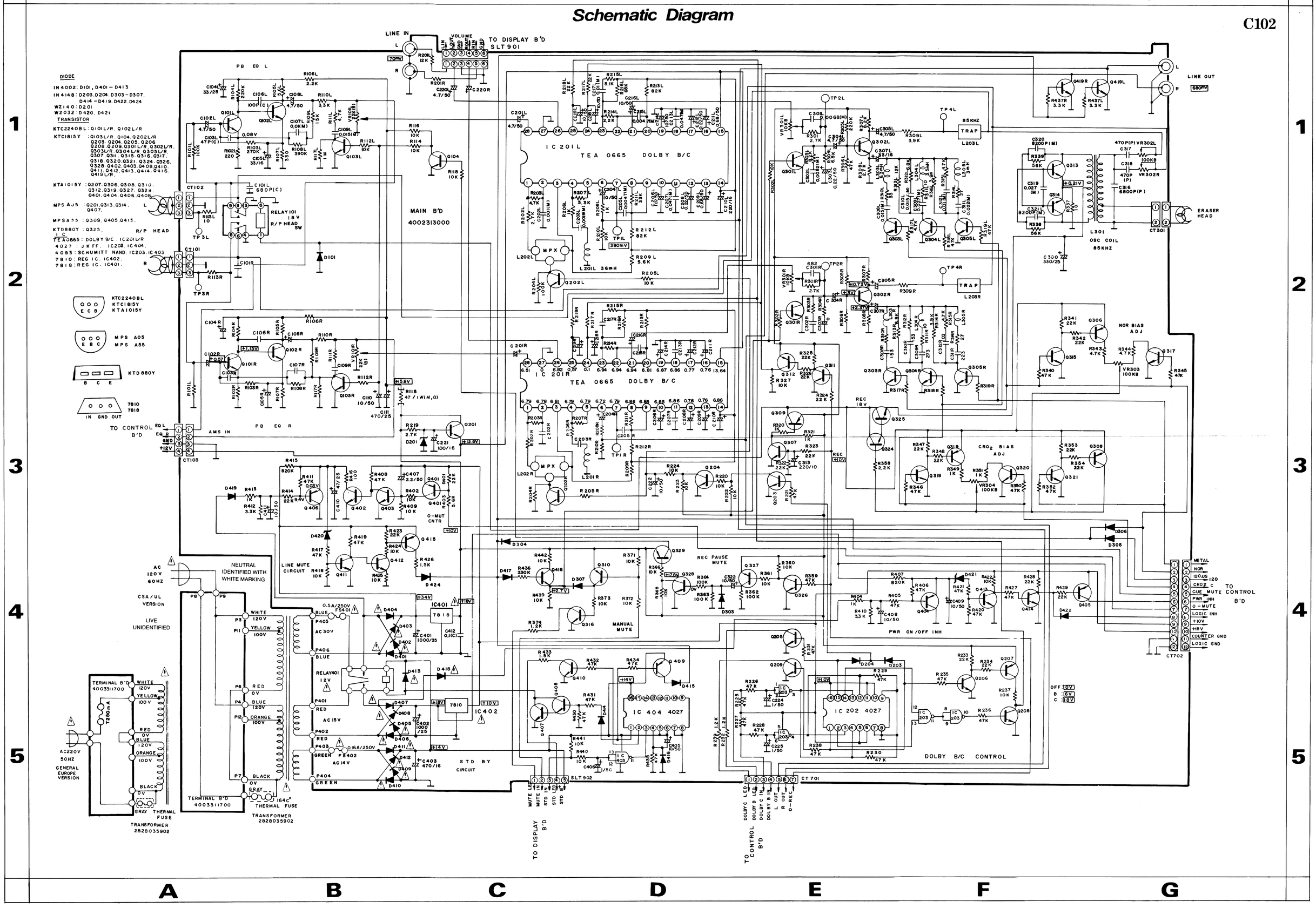

Schematic Diagram

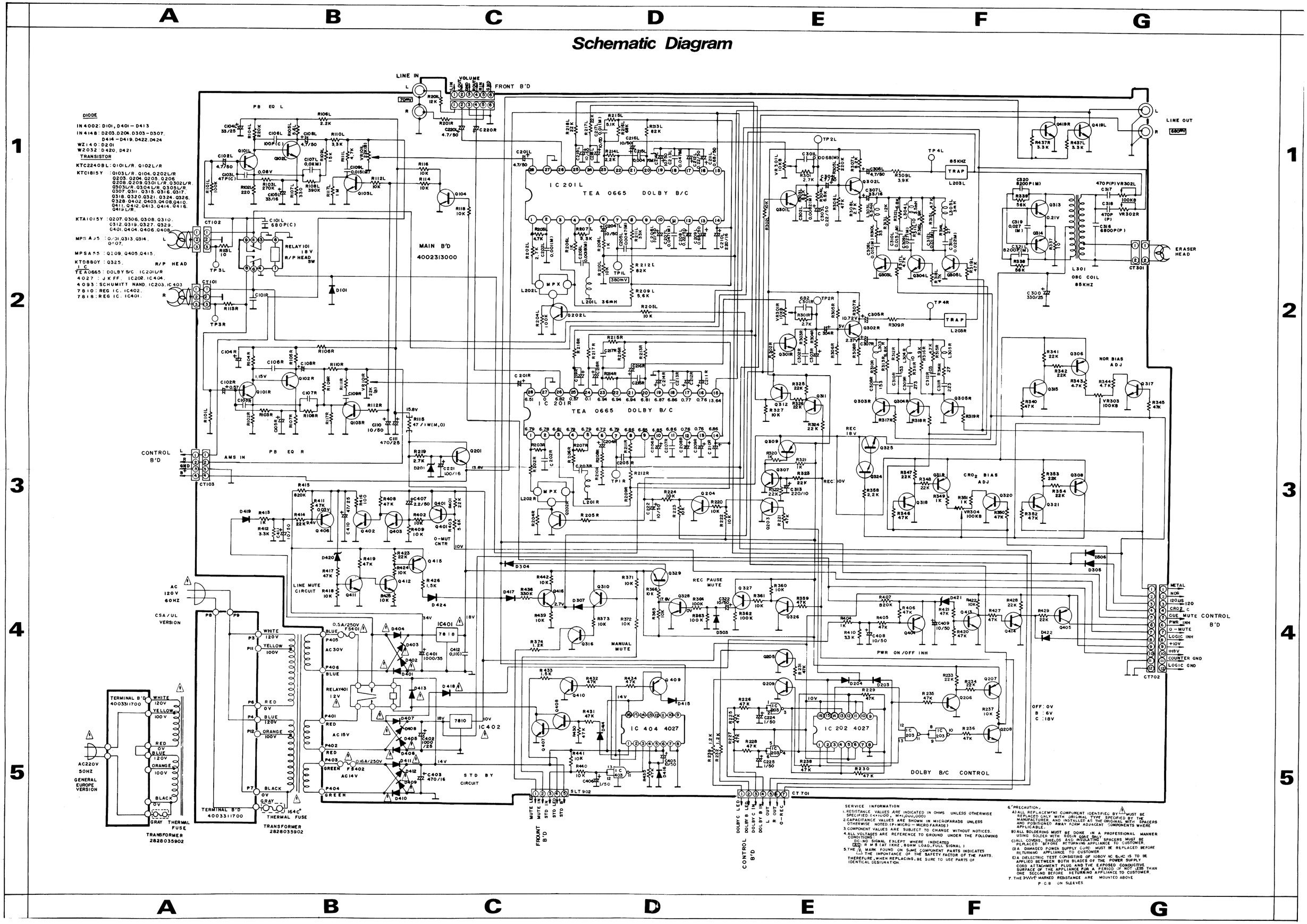

DIODE

IN4002: D101, D401 – D413
IN4148: D203, D204, D303 – D307, D414 – D419, D422, D424
WZ140: D201
W2032: D420, D421

TRANSISTOR

KTC2240BL: Q101L/R, Q102L/R
KTC1815Y: Q103L/R, Q104, Q202L/R, Q203, Q204, Q205, Q206, Q208, Q209, Q301L/R, Q302L/R, Q303L/R, Q304L/R, Q305L/R, Q307, Q311, Q315, Q316, Q317, Q318, Q320, Q321, Q324, Q326, Q328, Q402, Q403, Q408, Q410, Q411, Q412, Q413, Q414, Q416, Q419L/R
KTA1015Y: Q207, Q306, Q308, Q310, Q312, Q319, Q327, Q329, Q401, Q404, Q406, Q408
MPSA05: Q301, Q313, Q314, Q407
MPSA55: Q309, Q405, Q415
KTD880Y: Q325

IC

TEA0665: DOLBY B/C IC201L/R
4027: J K FF IC202, IC404
4093: SCHUMITT NAND IC203, IC403
7810: REG IC. IC402
7818: REG IC. IC401

SERVICE INFORMATION

1. RESISTANCE VALUES ARE INDICATED IN OHMS UNLESS OTHERWISE SPECIFIED. (K=1000, M=1,000,000)
2. CAPACITANCE VALUES ARE SHOWN IN MICROFARADS UNLESS OTHERWISE NOTED. (P=MICRO – MICROFARADS)
3. COMPONENT VALUES ARE SUBJECT TO CHANGE WITHOUT NOTICES.
4. ALL VOLTAGES ARE REFERENCE TO GROUND UNDER THE FOLLOWING CONDITIONS:
   DC: NO SIGNAL EXCEPT WHERE INDICATED
   AC: R M S (AT 1KHZ, 80HM LOAD, FULL SIGNAL)
5. THE ⚠ MARK FOUND ON SOME COMPONENT PARTS INDICATES THE IMPORTANCE OF THE SAFETY FACTOR OF THE PARTS. THEREFORE, WHEN REPLACING, BE SURE TO USE PARTS OF IDENTICAL DESIGNATION.
6. "PRECAUTION"
   A) ALL REPLACEMENT COMPONENT IDENTIFIED BY ⚠ MUST BE REPLACED ONLY WITH ORIGINAL TYPE SPECIFIED BY THE MANUFACTURER AND INSTALLED AS THE ORIGINAL WITH SPACERS AND POSITIONED AWAY FROM ADJACENT COMPONENTS WHERE APPLICABLE.
   B) ALL SOLDERING MUST BE DONE IN A PROFESSIONAL MANNER USING SOLDER WITH ROSIN CORE ONLY.
   C) ALL COVERS, SHIELDS AND INSULATING SPACERS MUST BE REPLACED BEFORE RETURNING APPLIANCE TO CUSTOMER.
   D) A DAMAGED POWER SUPPLY CORD MUST BE REPLACED BEFORE RETURNING APPLIANCE TO CUSTOMER.
   E) A DIELECTRIC TEST CONSISTING OF 1080V AC 5mC IS TO BE APPLIED BETWEEN BOTH BLADES OF THE POWER SUPPLY CORD ATTACHMENT PLUG AND THE EXPOSED CONDUCTIVE SURFACE OF THE APPLIANCE FOR A PERIOD OF NOT LESS THAN ONE SECOND BEFORE RETURNING APPLIANCE TO CUSTOMER.
7. THE ⚠ MARKED RESISTANCE ARE MOUNTED ABOVE P.C.B ON SLEEVES